Rotary actuator for butterfly valves

- Torque motor 160 Nm
- Nominal voltage AC 24...240 V / DC 24...125 V
- Control Open/close, 3-point
- With 2 integrated auxiliary switches

Picture may differ from product

## Technical data

| | | |
|---|---|---|
| **Electrical data** | Nominal voltage | AC 24...240 V / DC 24...125 V |
| | Nominal voltage frequency | 50/60 Hz |
| | Nominal voltage range | AC 19.2...264 V / DC 19.2...137.5 V |
| | Power consumption in operation | 20 W |
| | Power consumption in rest position | 6 W |
| | Power consumption for wire sizing | with 24 V 20 VA / with 240 V 52 VA |
| | Auxiliary switch | 2x SPDT, 1x 10° / 1x 0...90° (default setting 85°) |
| | Auxiliary switch note | 1x 10° / 1x 0...90° (default setting 85°) |
| | Switching capacity auxiliary switch | 1 mA...3 A (0.5 A inductive), DC 5 V...AC 250 V |
| | Connection protective earth | earth terminal |
| | Connection supply / control | Terminals 2.5 $mm^2$ |
| | Connection auxiliary switch | Terminals 2.5 $mm^2$ |
| | Parallel operation | Yes (note the performance data) |
| **Functional data** | Torque motor | 160 Nm |
| | Manual override | hand crank |
| | Running time motor | 35 s / 90° |
| | Running time motor variable | 30...120 s |
| | Sound power level, motor | 68 dB(A) |
| | Position indication | Mechanical, integrated |
| **Safety data** | Protection class IEC/EN | I, protective earth (PE) |
| | Protection class UL | I, protective earth (PE) |
| | Degree of protection IEC/EN | IP66/67 |
| | Degree of protection NEMA/UL | NEMA 4X |
| | Housing | UL Enclosure Type 4X |
| | EMC | CE according to 2014/30/EU |
| | Low voltage directive | CE according to 2014/35/EU |
| | Certification IEC/EN | IEC/EN 60730-1 and IEC/EN 60730-2-14 |
| | UL Approval | cULus according to UL60730-1A, UL60730-2-14 and CAN/CSA E60730-1<br>The UL marking on the actuator depends on the production site, the device is UL-compliant in any case |
| | Type of action | Type 1 |
| | Rated impulse voltage auxiliary switch | 2.5 kV |
| | Pollution degree | 3 |
| | Ambient humidity | Max. 100% RH |
| | Ambient temperature | -30...50°C [-22...122°F] |
| | Storage temperature | -40...80°C [-40...176°F] |

## Technical data

| | | |
|---|---|---|
| **Safety data** | Servicing | maintenance-free |
| **Mechanical data** | Connection flange | F07 (F05/F10 only with accessory) |
| **Weight** | Weight | 5.0 kg |

## Safety notes

- This device has been designed for use in stationary heating, ventilation and air-conditioning systems and must not be used outside the specified field of application, especially in aircraft or in any other airborne means of transport.
- Caution: Mains voltage!
- The device has a protective earthing. Incorrect connection of the protective earth can lead to hazards due to electrical shock.
- Only authorised specialists may carry out installation. All applicable legal or institutional installation regulations must be complied with during installation.
- Apart from the wiring compartment, the device may only be opened at the manufacturer's site. It does not contain any parts that can be replaced or repaired by the user.
- The device is not designed for applications where chemical influences (gases, fluids) are present or for utilisation in corrosive environments in general.
- The device contains electrical and electronic components and must not be disposed of as household refuse. All locally valid regulations and requirements must be observed.
- The two switches integrated in the actuator are to be operated either on mains voltage or on safety extra-low voltage. The combination mains voltage/safety extra-low voltage is not permitted.
- In case of maintenance work on the hydronic system, the correct valve position must be set via the control signal. Additionally, the actuator has to be disconnected from the power supply. The hand crank and manual override must not be used as a safety measure to maintain the set valve position.

## Product features

**Fields of application**

The actuator is particularly suitable for utilisation in outdoor applications and is protected against the following weather conditions:
- UV radiation
- Dirt / Dust
- Rain / Snow
- Air humidity

**Internal heating**

An internal heater prevents condensation buildup.

Thanks to the integrated temperature and humidity sensor, the built-in heater automatically switches on/off.

**Configurable device**

The factory settings cover the most common applications.

Parameters can be modified using Belimo Assistant 2, either wirelessly via Near Field Communication (NFC), or via a wired connection.

**Simple direct mounting**

Simple direct mounting on the butterfly valve. The mounting orientation in relation to the butterfly valve can be selected in 90° (angle) increments.

**Manual override**

The valve can be manually operated using a hand crank. Unlocking is carried out manually by removing the hand crank.

**High functional reliability**

The actuator is overload protected, requires no limit switches and automatically stops when the end stop is reached.

**Flexible signalling**

The actuator has one auxiliary switch with a fixed setting (10°) and one adjustable auxiliary switch (0...90°).

## Accessories

| Tools | Description | Type |
|---|---|---|
| | Service tool for wired and wireless setup, on-site operation and troubleshooting. | Belimo Assistant 2 |
| | Belimo Assistant Link Bluetooth and USB to NFC and MP-Bus converter for configurable and communicative devices | LINK.10 |
| | Connecting cable 5 m, A: RJ11 6/4 LINK.10, B: 6-pin for connection to service socket | ZK1-GEN |
| | Connecting cable 5 m, A: RJ11 6/4 LINK.10, B: free wire end for connection to MP/PP terminal | ZK2-GEN |

| Mechanical accessories | Description | Type |
|---|---|---|
| | Position indicator and tappet shaft, F07, square 45° offset, SW 17, DN 125...300 | ZPR01 |
| | Tappet shaft, F07, square 45° offset, SW 17 | ZPR02 |
| | Position indicator and tappet shaft, F05, square 45° offset, SW 14, DN 80...100 | ZPR03 |
| | RetroFIT+ adapter kit, F07/F10 (incl. screws F07), flat head/square, SW 17 | ZPR05 |
| | RetroFIT+ adapter kit, F07/F10 (incl. screws F07), square 45° offset, SW 14 | ZPR06 |
| | Adapter kit with spacer ring, F07, square 45° offset, SW 17 | ZPR08 |
| | RetroFIT+ adapter kit, F07/F05/F10 (incl. screws F07), flat head/square, SW 14 | ZPR09 |
| | RetroFIT+ adapter kit, F05/F07/F10 (incl. screws F05), flat head/square, SW 14 | ZPR10 |
| | RetroFIT+ adapter kit, F07/F10 (incl. screws F07), square 45° offset, SW 18 | ZPR11 |
| | RetroFIT+ adapter kit, F07/F10 (incl. screws F07), flat head/square, SW 16 | ZPR12 |
| | RetroFIT+ adapter kit, F07/F05/F10 (incl. screws F07), flat head/square, SW 11 | ZPR13 |
| | RetroFIT+ adapter kit, F07/F05/F10 (incl. screws F07), flat head/square, SW 12.7 | ZPR14 |
| | RetroFIT+ adapter kit, F07/F10 (incl. screws F07), square 45° offset, SW 11 | ZPR15 |
| | Hand crank for PR/PM actuator | ZPR20 |
| | Spacer ring, F04/F05, Height 22 mm | ZRI-001 |
| | Spacer ring, F05/F07, Height 23.5 mm | ZRI-002 |

## Electrical installation

**Caution: Mains voltage!**

**Parallel connection of other actuators possible. Observe the performance data.**

AC 24...240 V / DC 24...125 V, open/close

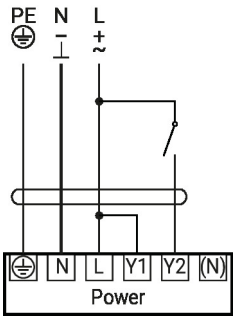


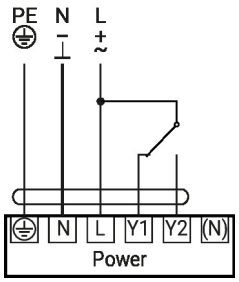


AC 24...240 V / DC 24...125 V, 3-point

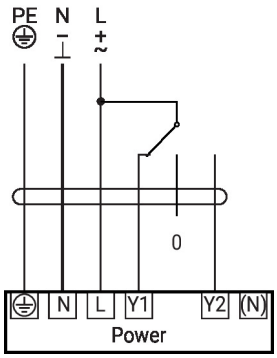

## Electrical installation

Auxiliary switch

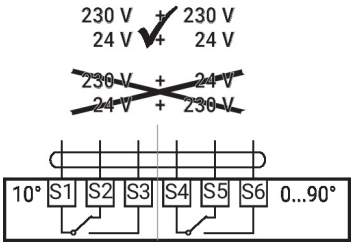


## Operating controls and indicators

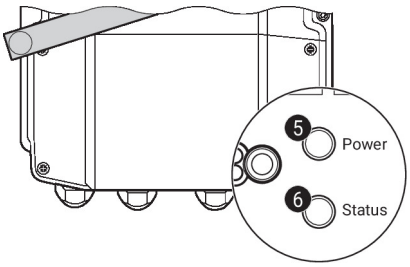


**5 Push-button and LED display green**

| | |
|---|---|
| Off: | No power supply or malfunction |
| On: | In operation |
| Press button: | Triggers test run, followed by standard mode |

**6 Push-button and LED display yellow**

| | |
|---|---|
| Off: | Standard mode |
| On: | Test run active |

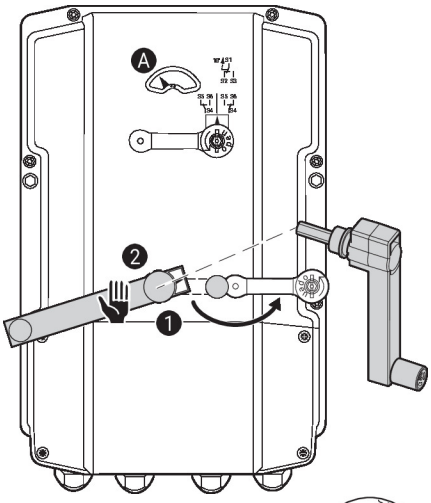


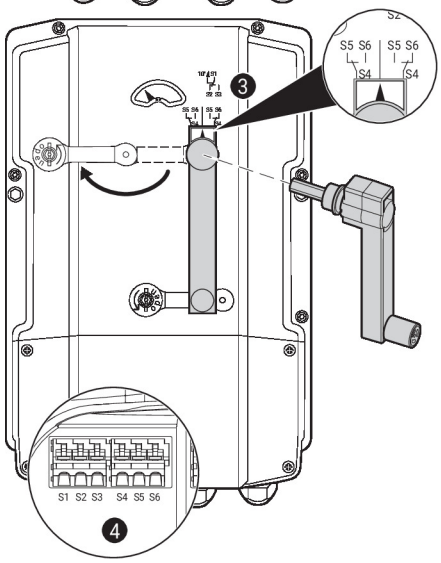


### Auxiliary switch settings

> ⚠ **Note:** Perform settings on the actuator only in deenergised state.

**For the auxiliary switch position settings, carry out points 1 to 4 successively.**

**1 Gear train disengagement**
Opening the manual override cover and adjusting the hand crank.
Manual override is possible.

**2 Manual override**
Turn the hand crank until the desired switching position A is indicated and then remove the hand crank.

**3 Auxiliary switch**
Opening the auxiliary switch adjustment cover and adjusting the hand crank.
Turn the hand crank until the arrow points to the vertical line.

**4 Terminals**
Connect continuity tester to S4 + S5 or to S4 + S6.
If the auxiliary switch should switch in the opposite direction, rotate the hand crank by 180°.

## Service

Using Belimo Assistant 2, device parameters can be modified. Belimo Assistant 2 can operate on a smartphone, tablet or PC. The available connection options vary depending on the hardware on which Belimo Assistant 2 is installed.

For more information about Belimo Assistant 2, refer to the Quick Guide – Belimo Assistant 2.

**Wireless connection**

Belimo devices marked with the NFC logo can be accessed either directly with an NFC-capable smartphone or with a Bluetooth-capable smartphone connected to Belimo Assistant Link.

Requirement:

- NFC- or Bluetooth-capable smartphone or tablet
- Belimo Assistant 2 (Google Play and Apple App Store)

Align the NFC-capable smartphone or Belimo Assistant Link with the device's NFC logo so that both NFC antennas are superposed.

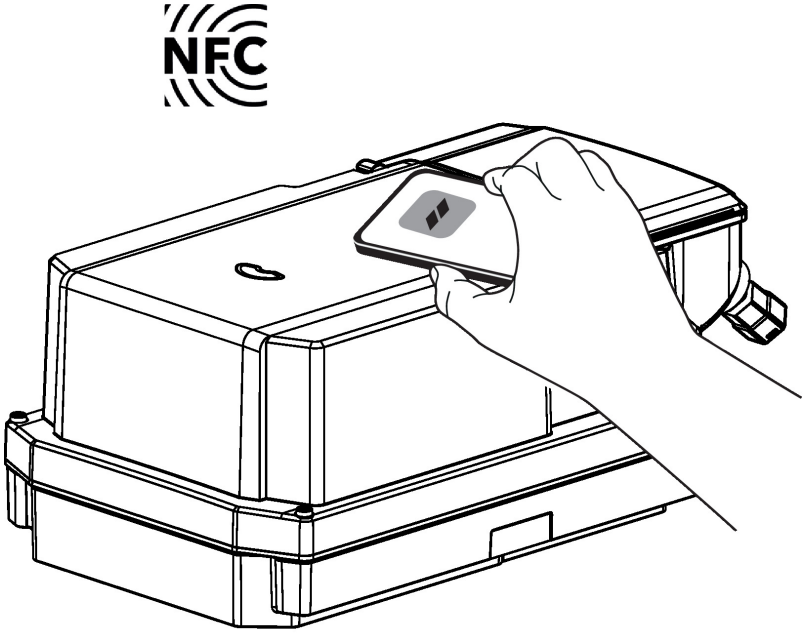

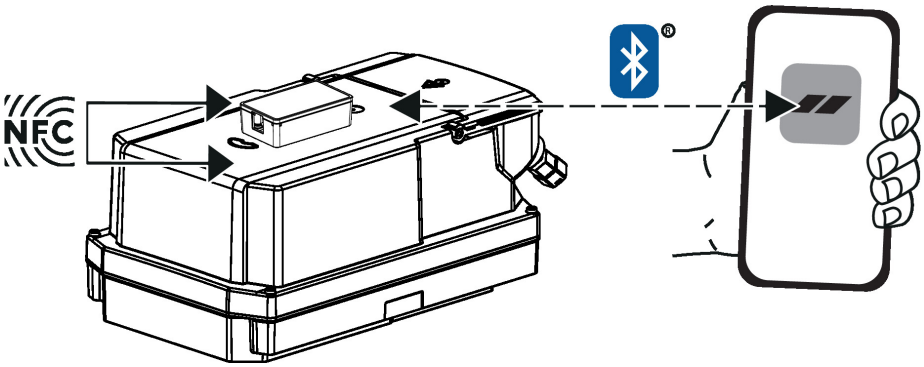

## Service

**Wired connection**

Belimo devices can be accessed by connecting Belimo Assistant Link to the USB port on a PC or laptop and to the service socket or MP-Bus wire on the device.

Belimo Assistant 2 acts as MP client. Therefore, no other MP client shall be connected to the device.

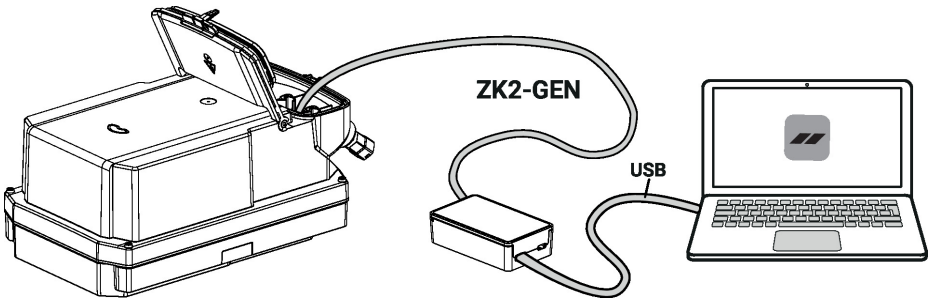


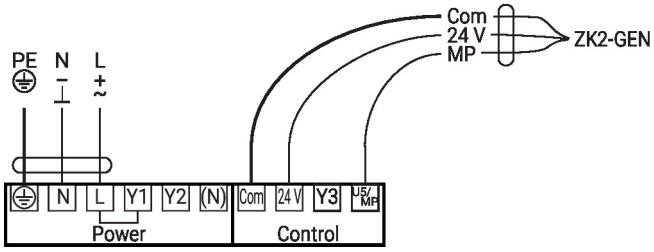


## Dimensions

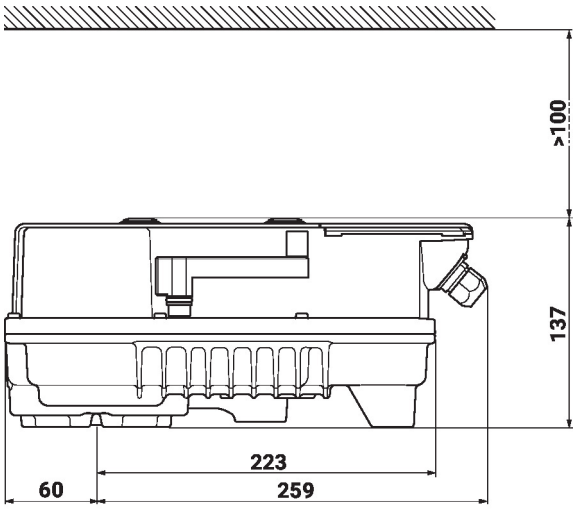


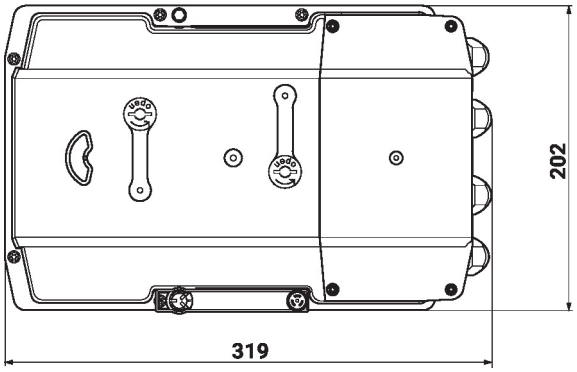

## Further documentation

- The complete product range for water applications
- Data sheets for butterfly valves
- Installation instructions for actuators and/or butterfly valves
- General notes for project planning
- Quick Guide – Belimo Assistant 2