VAV-Compact unit – with VAV controller, dynamic Δp sensor and damper actuator

- Field of application: VAV units in comfort applications
- Application: VAV/CAV, position control
- Belimo D3, dynamic flow sensor
- Functional range differential pressure 0...500 Pa
- Control communicative, hybrid, modulating (0/2...10 V)
- Communication via BACnet MS/TP, Modbus RTU or Belimo MP-Bus
- Conversion of sensor signals
- Service socket for operating devices

Picture may differ from product

## Technical data

| | | |
|---|---|---|
| **Electrical data** | Nominal voltage | AC/DC 24 V |
| | Nominal voltage frequency | 50/60 Hz |
| | Nominal voltage range | AC 19.2...28.8 V / DC 21.6...28.8 V |
| | Power consumption in operation | 3.5 W |
| | Power consumption in rest position | 1.5 W |
| | Power consumption for wire sizing | 6.5 VA |
| | Inrush current (Imax) | 8.0 A @ 5 ms |
| | Connection supply / control | Cable 1 m, 6x 0.75 mm² |
| **Data bus communication** | Communicative control | BACnet MS/TP<br>Modbus RTU (factory setting)<br>MP-Bus |
| | Number of nodes | BACnet / Modbus see interface description<br>MP-Bus max. 8 |
| **Functional data** | Torque motor | 20 Nm |
| | Operating range Y | 2...10 V |
| | Input impedance | 100 kΩ |
| | Operating range Y variable | 0...10 V |
| | Position feedback U | 2...10 V |
| | Position feedback U note | Max. 1 mA |
| | Position feedback U variable | Start point 0...8 V<br>End point 2...10 V |
| | V'max adjustable | 20...100% of V'nom |
| | V'mid adjustable | >V'min...<V'max |
| | V'min adjustable | 0...100% of V'nom (<V'max) |
| | Manual override | with push-button, can be locked |
| | Angle of rotation | 95° |
| | Angle of rotation note | adjustable mechanical or electrical limitation |
| | Mechanical interface | Universal shaft clamp 10...20 mm |
| | Position indication | Mechanical |
| **Measuring data** | Measuring principle | Belimo D3, dynamic flow sensor |
| | Installation orientation | position-independent, no zeroing necessary |
| | Functional range differential pressure | 0...500 Pa |
| | Maximum system pressure | 1500 Pa |
| | Burst pressure | ±5 kPa |
| | Height compensation | Adjustment of system height (range 0...3000 m above sea level) |
| | Condition measuring air | 0...50°C / 5...95% RH, non-condensing |
| | Pressure tube connection | Nipple diameter 5.3 mm |

## Technical data

| | | |
|---|---|---|
| **Safety data** | Protection class IEC/EN | III, Protective Extra-Low Voltage (PELV) |
| | Degree of protection IEC/EN | IP54 |
| | Degree of protection NEMA/UL | NEMA 2 |
| | Housing | UL Enclosure Type 2 |
| | EMC | CE according to 2014/30/EU |
| | Certification IEC/EN | IEC/EN 60730-1 and IEC/EN 60730-2-14 |
| | Type of action | Type 1 |
| | Rated impulse voltage supply / control | 0.8 kV |
| | Pollution degree | 3 |
| | Ambient humidity | Max. 95% RH, non-condensing |
| | Ambient temperature | 0...50°C [32...122°F] |
| | Storage temperature | -20...80°C [-4...176°F] |
| | Servicing | maintenance-free |
| **Weight** | Weight | 0.91 kg |

## Safety notes

- The device must not be used outside the specified field of application, especially not in aircraft or in any other airborne means of transport.
- Outdoor application: Only possible if no (sea) water, snow, ice, sunlight or aggressive gases act directly on the device and if it is ensured that the ambient conditions remain within the limit values specified in the data sheet at all times.
- Only authorised specialists may carry out installation. All applicable legal or institutional installation regulations must be complied with during installation.
- The device may only be opened at the manufacturer's site. It does not contain any parts that can be replaced or repaired by the user.
- Cables must not be removed from the device.
- The device contains electrical and electronic components and must not be disposed of as household refuse. All locally valid regulations and requirements must be observed.

## Product features

**Application**

The VAV-Compact unit is used for comfort applications for pressure-independent control of VAV units. See Technical brochure – VAV-Compact product range for volumetric flow applications.

Pressure measurement

The integrated differential pressure sensor is also suitable for very small volumetric flows. The maintenance-free sensor technology enables a wide range of applications in the HVAC comfort area such as in residential buildings, offices, hotels, etc.

Actuators

For the various applications and damper designs, various actuator variants with torque 5, 10 or 20 Nm are available to the VAV unit manufacturer.

Control functions

Volumetric flow (VAV/CAV) or position control (Open Loop)

## Product features

**Application Variable Air Volume (VAV)**

Variable air volume control in the V'min...V'max range, demand-dependent via a modulating reference variable (analogue or bus), e.g. room temperature or $CO_2$ controller for energy-saving air conditioning of individual rooms or zones.

V'nom, Δp @ V'nom

Calibration parameters, suitable for the VAV unit or the differential pressure pickup device used

Adjustment range Δp @ V'nom: 38...500 Pa

V'max (Max)

Maximum operating volumetric flow, adjustable 20...100% V'nom

V'min (Min)

Minimum operating volumetric flow, adjustable 0...100% V'nom

**Application Constant Air Volume (CAV)**

Constant volumetric flow control. If required, via step switching (switching contacts) for constant volumetric flow applications.

Steps: CLOSE / Min / Max / OPEN

**Application Position Control (Open Loop)**

Position control for integration of the VAV-Compact into an external VAV control loop. Transmitter and actuator unit.

Max

Range: 20...100 % rotation range

Min

Range: 0...100 % rotation range

**Demand Controlled Ventilation (DCV)**

Output of the demand signal (damper position) to the higher-level automation system – DCV function.

**Configurable device**

The factory settings cover the most common applications. Single parameters can be modified with Belimo Assistant 2.

**Bus operation**

Thanks to its multi-bus functionality, the VAV-Compact can be easily integrated into a bus system. The communication interface is defined on the system using the service tool ZTH EU: BACnet MS/TP, Modbus RTU, Belimo MP-Bus.

A hybrid mode is optionally available for BACnet MS/TP and Modbus RTU, bus connection combined with analogue control.

In bus mode, a sensor (0...10 V) can optionally be connected, e.g. a temperature sensor or a switching contact, for integration into the higher-level bus system.

**Operating settings**

Control functions

Volumetric flow (VAV/CAV) or position control (Open Loop)

Operating settings Min/Max/Nom

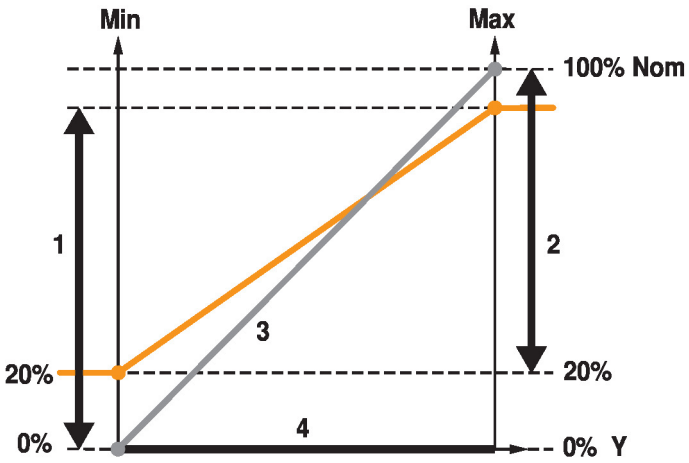


Nominal value (OEM setting) Nom
Adjustment range Min 1
Adjustment range Max 2
Feedback U 0...100% Nom 3
Control Y Min...Max 4

## Product features

**Operating and service tools**
Belimo Assistant 2 – can be locally plugged into the service socket or remotely via MP connection.

**High functional reliability**
The actuator is overload protected, requires no limit switches and automatically stops when the end stop is reached.

## Accessories

| Tools | Description | Type |
|---|---|---|
| | Service tool for wired and wireless setup, on-site operation and troubleshooting. | Belimo Assistant 2 |
| | Belimo Assistant Link Bluetooth and USB to NFC and MP-Bus converter for configurable and communicative devices | LINK.10 |
| | Connecting cable 5 m, A: RJ11 6/4 LINK.10, B: 6-pin for connection to service socket | ZK1-GEN |
| | Connecting cable 5 m, A: RJ11 6/4 LINK.10, B: free wire end for connection to MP/PP terminal | ZK2-GEN |

| Electrical accessories | Description | Type |
|---|---|---|
| | Connecting cable 5 m, A: RJ11 6/4 LINK.10, B: 6-pin for connection to service socket | ZK1-GEN |
| | Connecting cable 5 m, A: RJ11 6/4 LINK.10, B: free wire end for connection to MP/PP terminal | ZK2-GEN |

## Electrical installation

**Supply from isolating transformer.**

**The wiring of the line for BACnet MS/TP / Modbus RTU is to be carried out in accordance with applicable RS-485 regulations.**

**Modbus / BACnet: Supply and communication are not galvanically isolated. COM and ground of the devices must be connected to each other.**

**Wire colours:**
1 = black
2 = red
3 = white
5 = orange
6 = pink
7 = grey

**Functions:**
C1 = D- (wire 6)
C2 = D+ (wire 7)

BACnet MS/TP / Modbus RTU

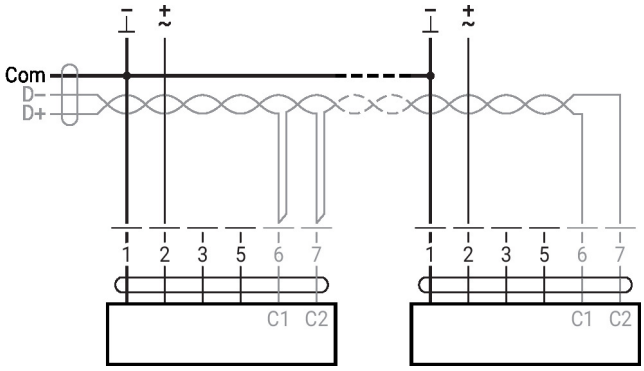

## Electrical installation

### Converter for sensors

Connection with switching contact, e.g. differential pressure switch

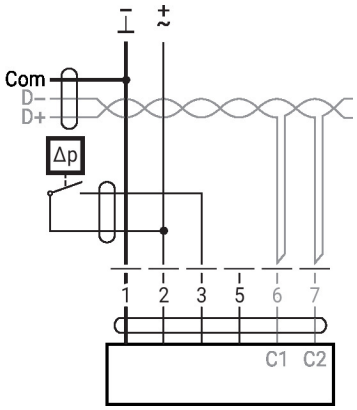


Switching contact requirements:
The switching contact must be able to switch a current of 16 mA at 24 V accurately.

Connection with active sensor, e.g. 0...10 V @ 0...50°C

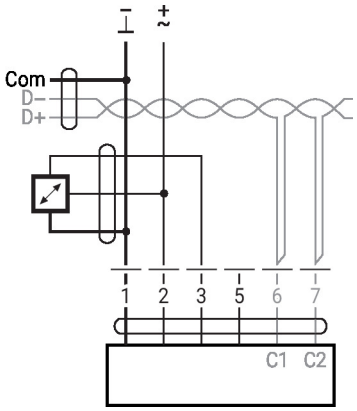


Possible voltage range: 0...32 V
Resolution 30 mV

## Further electrical installations

### MP-Bus

MP-Bus

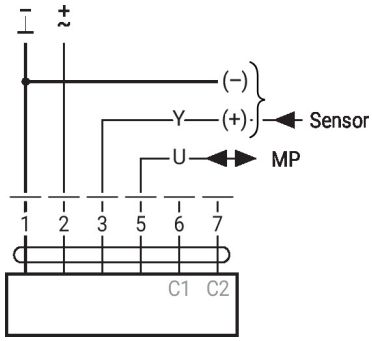

## Further electrical installations

### Functions with specific parameters (configuration necessary)

Local override control with AC 24 V (Bus mode)

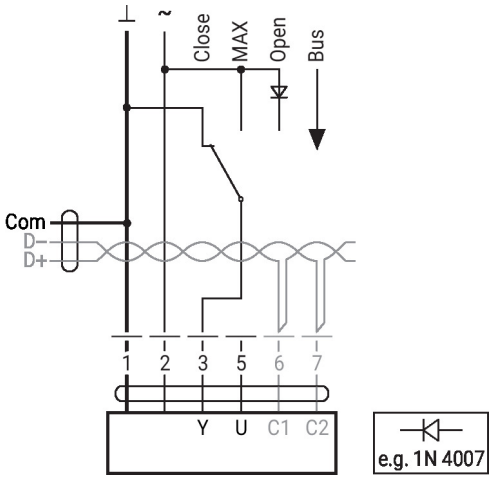


**Note:**
The local override control only works with AC 24 V supply.

Modbus RTU / BACnet MS/TP with analogue setpoint (hybrid operation)

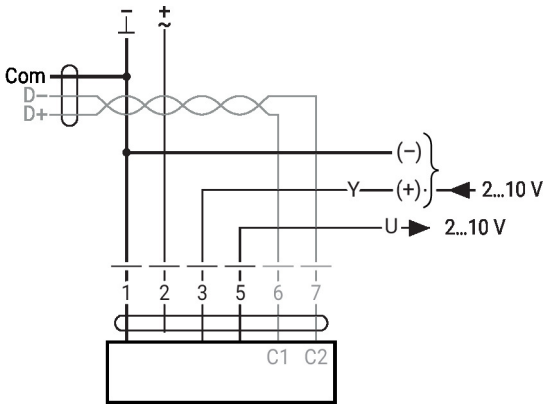

## Parameter and tool overview

### Settings and tool functions

| Designation | Setting values, limits, explanations | Units | Tool: ZTH EU | Tool: PC-Tool | Remarks |
|---|---|---|---|---|---|
| **System-specific data** | | | | | |
| Position | 16 characters, e.g. office 4 6th floor SUP | String | r | r/w | |
| Designation | 16 characters: unit designation etc. | String | r | r/w | |
| Modbus address | 1...247 | | r/w | – | Modbus adressing |
| Address (MP) | PP | | r/w | r/w | For Modbus applications: PP |
| $V'_{max}$ | 20...100% [$V'_{nom}$] | m³/h / l/s / cfm | r/w | r/w | >/= $V'_{min}$ |
| $V'_{mid}$ | $V'_{min}$...$V'_{max}$ | m³/h / l/s / cfm | r/w | r/w | |
| $V'_{min}$ | 0...100% [$V'_{nom}$] | m³/h / l/s / cfm | r/w | r/w | </= $V'_{max}$ |
| Altitude of installation | 0...3000 | m | r/w | r/w | Adaptation of Δp sensor to altitude (meters above sea level) |
| **Controller settings** | | | | | |
| Control function | Volumetric flow / Position control (Open Loop) | | – | – | |
| Mode | 0...10 / 2...10 | V | r/w[2] | r/w | For Modbus applications: 2...10 |
| CAV function[2] | CLOSE/$V'_{min}$/$V'_{max}$; shut-off level CLOSE 0.1<br>CLOSE/$V'_{min}$/$V'_{max}$; shut-off level CLOSE 0.5<br>V'min/$V'_{mid}$/$V'_{max}$; (NMV-D2M-comp.) | | – | r/w | For analogue control only |
| Positioning signal Y | Start value: 0...8; stop value: 2...10 | V | r | r/w | For analogue control only |
| Feedback U | Volume / damper position / Δp | | – | r/w | For analogue feedback |
| Feedback U | Start value: 0...8; stop value: 2...10 | V | – | r/w | For analogue feedback |
| Behaviour when switched on (Power-on) | No action / adaptation / synchronisation | | – | r/w | |
| Synchronisation behaviour | Y=0%<br>Y=100% | | – | r/w | Synchronisation at damper position 0 or 100% |
| Bus fail position | Last setpoint / damper CLOSE<br>$V'_{min}$ / $V'_{max}$ / damper OPEN | | – | r/w | |
| **Unit-specific settings** | | | | | |
| $V'_{nom}$ | 0...60'000 m³/h | m³/h / l/s / cfm | r | r/(w)[1] | Unit-specific setting value |
| Δp@$V'_{nom}$ | 38...500 | Pa | r | r/(w)[1] | Unit-specific setting value |
| Direction of rotation (for Y=100%) | cw/ccw | | r/w[2] | r/w | Unit-specific setting value |
| Range of rotation | Adapted [4] / programmed 30...95 | ° | – | r/w | |
| Torque | 100 / 75 / 50 / 25 | % | | r/w | % of nominal torque |

[1] Write function accessible only for VAV manufacturers
[2] Access only via servicing level 2
[3] Within the mechanical limitation
[4] The first time the supply voltage is switched on, i.e. at the time of initial commissioning, the actuator carries out an adaption, which is when the operating range and position feedback adjust themselves to the mechanical setting range. The actuator then moves into the required position in order to ensure the volumetric flow defined by the control signal.

Parameter and tool overview

## Settings and tool functions

| Designation | Setting values, limits, explanations | Units | Tool | | Remarks |
|---|---|---|---|---|---|
| | | | ZTH EU | PC-Tool | |
| **Operating data** | | | | | |
| Setpoint / Actual value<br>Damper position | | m³/h / l/s / cfm<br>Pa / % | r | r<br>T | T (trend) display with print function and data saving to HD |
| Simulation | Damper OPEN/CLOSE<br>V'min / V'mid / V'max / Motor Stop | | w | w | |
| Running times | Operating time, running time<br>Ratio (relation) | | – | r | |
| Alarm messages | Setting range enlarged, mech. overload,<br>Stop&Go ratio too high | | – | r/w | |
| Serial number | Device ID | | r | r | Incl. production date |
| Type | Type designation | | r | r | |
| Version display | Firmware, config. table ID | | r | r | |
| **Configuration data** | | | | | |
| Print, send | | | – | yes | |
| Backup in file | | | – | yes | |
| Log data / Logbook | Activities log | | – | yes | |

## Operating controls and indicators

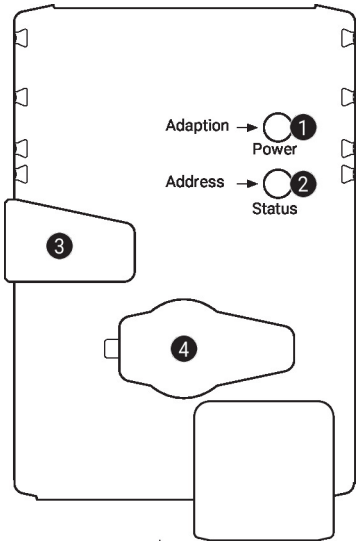


**1 Push-button and LED display green**

| | |
|---|---|
| Off: | No power supply or malfunction |
| On: | In operation |
| Press button: | In standard mode: Triggers angle-of-rotation adaptation |
| | In address mode: Confirms set address (1...16) |
| Flashing: | In address mode: Pulses corresponding to the set address (1...16) |
| | When starting: Resets to factory setting (communication) |

**2 Push-button and LED display yellow**

| | |
|---|---|
| Off: | Standard mode |
| On: | Adaptation or synchronisation process active |
| | Or actuator in address mode (LED display flashing) |
| Flickering: | BACnet/Modbus communication active |
| Press button: | In operation (>3 s): Switches address mode on and off |
| | In address mode: Sets address by pressing several times |
| | When starting (>5 s): Resets to factory setting (communication) |

**3 Manual override button**

| | |
|---|---|
| Press button: | Gear train disengages, motor stops, manual override possible |
| Release button: | Gear train engages, synchronisation starts, standard mode |

**4 Service plug**
For connecting configuration and service tools

**Check supply 24 V**

| | |
|---|---|
| 1 Off and 2 On | Possible wiring error in power supply |

## Installation notes

**Installation situation**

Mounting VAV-Compact control equipment:

The VAV-Compact is assembled, set and calibrated on the VAV unit in the factory by the VAV unit manufacturer.

Installation of the VAV unit:

The VAV unit must be installed according to the specifications of the VAV unit manufacturer.

Installation specification Δp sensor:

No restrictions, but it must be avoided that any condensation can run into the sensor and remain there.

Accessibility of control equipment:

Accessibility to the control equipment must be guaranteed at all times.

Pressure tube connections:

The pressure tube connections must not come into contact with liquids or greasing agents of any kind, this includes any residue inside or on the surface of the pressure tubes.

## Installation notes

**Servicing**

Cleaning work during installation, commissioning or maintenance

Belimo VAV devices are maintenance-free. We recommend dry removal of dust from the outside of the housing if necessary.

The duct system and the VAV units are maintained on the occasion of the cleaning intervals required by law or by the specific system. Please observe the following points.

Cleaning work on the damper, differential pressure pickup devices and pressure tubes

When cleaning the duct system or the VAV unit, remove the pressure tubes on the VAV controller so that it will not be affected.

Using compressed air, e.g. blowing out the differential pressure pickup devices or pressure tubes

Before doing this work, disconnect the differential pressure pickup devices or pressure tubes from the differential pressure sensor.

Connecting the pressure tubes

To ensure the correct installation of the pressure tubes, we recommend marking them with + or – before disassembly.

## Service

Using Belimo Assistant 2, device parameters can be modified. Belimo Assistant 2 can operate on a smartphone, tablet or PC. The available connection options vary depending on the hardware on which Belimo Assistant 2 is installed.

For more information about Belimo Assistant 2, refer to the Quick Guide – Belimo Assistant 2.

**Wired connection**

Belimo devices can be accessed by connecting Belimo Assistant Link to the USB port on a PC or laptop and to the Service Socket or MP-Bus wire on the device.

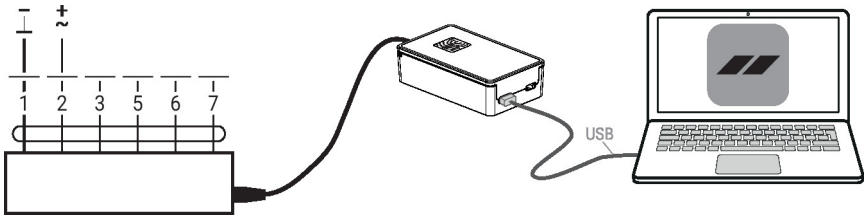


**Quick addressing**

BACnet MS/TP – Modbus RTU

1. Press the "Address" button until the green "Power" LED is no longer illuminated. The green "Power" LED flashes in accordance with the previously set address.

2. Set the address by pressing the "Address" button the corresponding number of times (1...16).

3. The green LED flashes in accordance with the address that has been entered (1...16). If the address is not correct, it can be reset in accordance with step 2.

4. Confirm the address setting by pressing the green "Adaptation" button.

If the address is not confirmed within 60 seconds, the address procedure will be ended. Any address change that has already been started will be discarded.

The resulting BACnet MS/TP and Modbus RTU address is made up of the set basic address plus the short address (e.g. 100+7=107).

## Dimensions

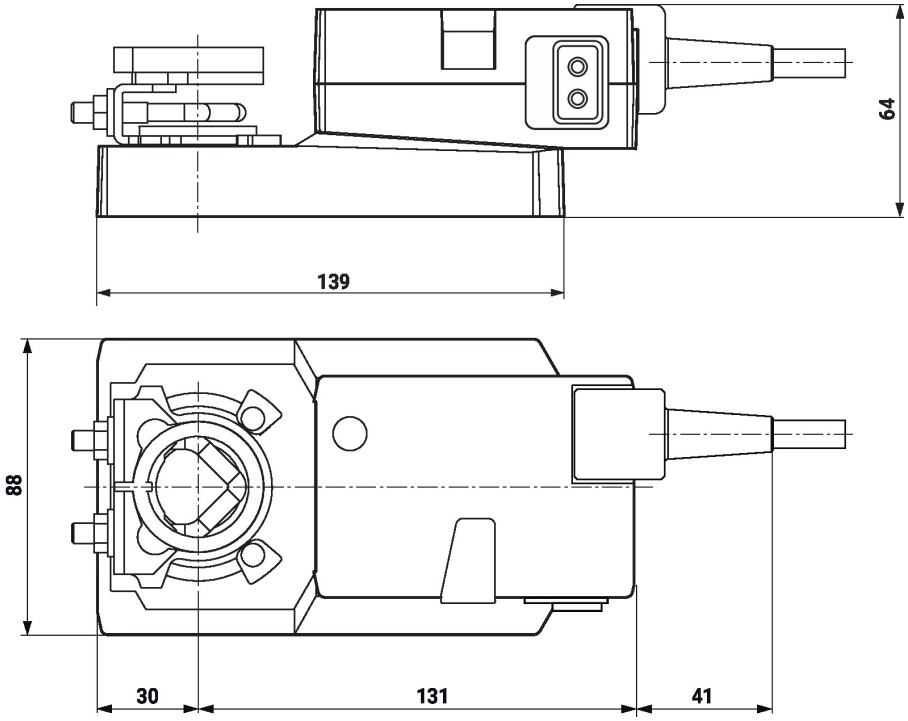


## Further documentation

- VAV-Compact product range for comfort applications
- Tool connections
- BACnet Interface description
- Modbus Interface description
- Overview MP Cooperation Partners
- Introduction to MP-Bus Technology
- VAV-Universal application description
- Volumetric flow and pressure control from Belimo, product range overview
- Quick Guide – Belimo Assistant 2