Pipe connector for globe valve with external thread

- internal thread G to internal thread Rp
- incl. gasket

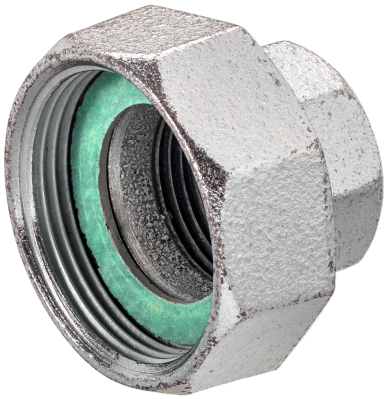

Picture may differ from product

Type Overview

Type	DN	G ["]	Rp ["]	B [mm]	Suitable for	Weight
ZH4515	15	1 1/8	1/2	21	H411B...H415B H511B...H515B	0.14 kg
ZH4520	20	1 1/4	3/4	23	H420B H520B	0.18 kg
ZH4525	25	1 1/2	1	26	H425B H525B	0.21 kg
ZH4532	32	2	1 1/4	30	H432B H532B	0.35 kg
ZH4540	40	2 1/4	1 1/2	32	H440B H540B	0.43 kg
ZH4550	50	2 3/4	2	35	H450B H550B	0.63 kg

Technical data

Functional data	Fluid temperature	-10...120°C [14...248°F]
Materials	Used materials	Malleable cast iron, galvanized

Safety notes

- This accessory has been designed for use in stationary heating, ventilation and air-conditioning systems and must not be used outside the specified field of application, especially in aircraft or in any other airborne means of transport.
- Only authorised specialists may carry out installation. All applicable legal or institutional installation regulations must be complied with during installation.
- The accessory may not be disposed of as household refuse. All locally valid regulations and requirements must be observed.

Installation notes

Water quality requirements

The water quality requirements specified in VDI 2035 must be adhered to.

Belimo valves are regulating devices. For the valves to function correctly in the long term, they must be kept free from particle debris (e.g. welding beads during installation work). The installation of a suitable strainer is recommended.

General notes

Delivery notes

In the ZH45.. scope of delivery: union nut (G thread), insert (RP thread), gasket

Dimensions
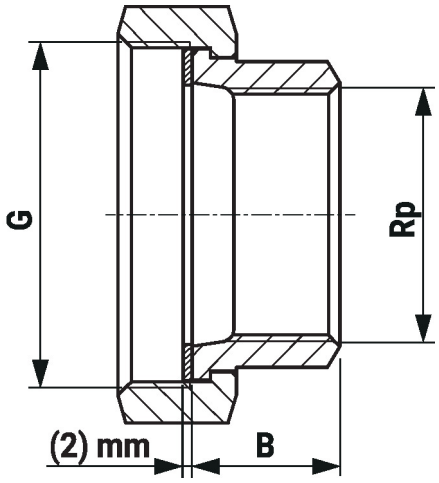
Dimensional drawings