Duct sensor Humidity / Temperature

For measuring the relative or absolute humidity and temperature in duct applications. Instead of the humidity signal, the enthalpy or the dewpoint can be selected as an output signal. With Modbus RTU communication and integrated 0...10 V outputs. IP65 / NEMA 4X rated housing.

Type Overview

Type	Communication	Output signal active temperature	Output signal active humidity	Probe length
22DTH-15M	Modbus RTU	0...5 V, 0...10 V	0...5 V, 0...10 V	140 mm
22DTH-15Q	Modbus RTU	0...5 V, 0...10 V	0...5 V, 0...10 V	270 mm

Technical data

Electrical data	Nominal voltage	{spec value=ACDC} 24 V
	Nominal voltage range	AC 19...29 V / DC 15...35 V
	Power consumption AC	4.3 VA
	Power consumption DC	2.3 W
	Electrical connection	Pluggable spring loaded terminal block max. 2.5 mm²
	Cable entry	Cable gland with strain relief 2x ø6 mm
Data bus communication	Communication	Modbus RTU
	Number of nodes	Modbus see interface description
Functional data	Medium	Air
	Voltage output	2 x 0...5 V, 0...10 V, min. resistance 10 kΩ
	Output signal active note	Output 0...5/10 V with Jumper adjustable
Measuring data	Measured values	Relative humidity Absolute humidity Dew point Enthalpies Temperature
Specification temperature active	Sensing element technology	Polymer-based capacitive sensor with stainless steel wire mesh filter
	Measuring range	Adjustable via Modbus -20...80°C [-5...175°F] (default setting) Attention: The maximum measuring range listed does not indicate the allowable fluid temperature for the sensor. Refer to safety data for the maximum fluid temperature limits.
	Accuracy temperature	±0.3°C @ 25°C [±0.5°F @ 77°F]
	Long term stability	±0.05°C p.a. @ 21°C [±0.09°F p.a. @ 70°F]
	Time constant τ (63%) in the air duct	Typical 125 s @ 3 m/s
Specification Humidity	Sensing element technology	Polymer-based capacitive sensor with stainless steel wire mesh filter

Technical data

Specification Humidity	Measuring range	Adjustable via Modbus Default setting: 0...100% RH
	Measuring range absolute humidity	Adjustable via Modbus Default setting: 0...80 g/m³
	Measuring range enthalpy	Adjustable via Modbus Default setting: 0...85 kJ/kg
	Measuring range dew point	Adjustable via Modbus Default setting: -20...80°C [-5...175°F]
	Accuracy	±2% between 0...80% RH @ 25°C
	Long term stability	±0.3% RH p.a. @ 21°C @ 50% RH
	Time constant τ (63%) in the air duct	Typical 10 s @ 3 m/s
Safety data	Protection class IEC/EN	III, Safety Extra-Low Voltage (SELV)
	Power source UL	Class 2 Supply
	Degree of protection IEC/EN	IP65
	Degree of protection NEMA/UL	NEMA 4X
	EU Conformity	CE Marking
	Certification IEC/EN	IEC/EN 60730-1
	Quality Standard	ISO 9001
	UL Approval	cULus acc. to UL60730-1A/-2-9/-2-13, CAN/CSA E60730-1/-2-9
	Type of action	Type 1
	Rated impulse voltage supply	0.8 kV
	Pollution degree	3
	Ambient humidity	Max. 95% RH, non-condensing
	Ambient temperature	-35...50°C [-30...120°F]
	Fluid humidity	0...100% RH, short-term condensation permitted
	Fluid temperature	-40...80°C [-40...175°F]
	Operating condition airflow	max. 12 m/s
Materials	Housing	Cover: PC, orange Bottom: PC, orange Seal: NBR70, black UV resistant
	Cable gland	PA6, black

Safety notes

This device has been designed for use in stationary heating, ventilation and air-conditioning systems and must not be used outside the specified field of application. Unauthorised modifications are prohibited. The product must not be used in relation with any equipment that in case of a failure may threaten humans, animals or assets.

Ensure all power is disconnected before installing. Do not connect to live/operating equipment.

Only authorised specialists may carry out installation. All applicable legal or institutional installation regulations must be complied with during installation.

The device contains electrical and electronic components and must not be disposed of as household refuse. All locally valid regulations and requirements must be observed.

Remarks

General remarks concerning sensors

Sensing devices with a transducer should always be operated in the middle of the measuring range to avoid deviations at the measuring end points. The ambient temperature of transducer electronics should be kept constant. The transducers must be operated at a constant supply voltage (±0.2 V). When switching the supply voltage on/off, onsite power surges must be avoided.

Remark: Occurring draft leads to a better carrying-off of dissipative power at the sensor. Thus temporally limited fluctuations might occur upon temperature measurement.

Build-up of self-heating by electrical dissipative power

Temperature sensors with electronic components always have a dissipative power which affects the temperature measurement of the ambient air. The dissipation in active temperature sensors shows a linear increase with rising operating voltage. The dissipative power should be taken into account when measuring temperature.

In case of a fixed operating voltage (±0.2 V), this is normally done by adding or reducing a constant offset value. As Belimo transducers work with a variable operating voltage, for reasons of production engineering only one operating voltage can be taken into consideration. Transducers 0...10 V / 4...20 mA have a standard setting at an operating voltage of DC 24 V. This means that at this voltage, the expected measuring error of the output signal will be the least. For other operating voltages, the offset error will be increased by a changing power loss of the sensor electronics.

If a readjustment directly at the active sensor should be necessary during later operation, this can be done with the following adjustment methods.

- For sensors with NFC or dongle with the corresponding Belimo app
- For sensors with a trimming potentiometer on the sensor board
- For bus sensors via bus interface with a corresponding software variable

Application notice for humidity sensors

The humidity sensor is extremely sensitive. Touching the sensor element or exposing it to aggressive substances like chlorine, ozone, ammonia, hydrogen peroxide or ethanol (i.e. as a cleaning agent) may affect the measurement accuracy.

Long term operation outside the recommended conditions (5...60°C and 20...80% RH) can result in a temporary offset. After returning into the recommended range, this effect disappears.

Parts included

Description	Type
Mounting flange for duct sensor 19.5 mm, Plastic	A-22D-A35
Cable Gland with strain relief ø6...8 mm	

Accessories

Optional accessories

Description	Type
Replacement filter sensor probe tip, Stainless steel	A-22D-A06
Connection adapter flex conduit, M20x1.5, for cable gland 1x 6 mm	A-22G-A01.1
Connection adapter flex conduit, M20, for cable gland 2x 6 mm	A-22G-A02.1
Mounting plate L housing	A-22D-A10

Tools

Description	Type
Belimo Duct Sensor Assistant App	Belimo Duct Sensor Assistant App
Bluetooth dongle	A-22G-A05

* Bluetooth dongle A-22G-A05

Certified and available in North America, European Union, EFTA States and UK.

Service

Tools connection

This sensor can be operated and configured using the Belimo Duct Sensor Assistant App.

When using the Belimo Duct Sensor Assistant App, the bluetooth dongle is required to enable communication between the app and the Belimo sensor.

For standard operation and configuration of the sensor, the bluetooth dongle and the Belimo Duct Sensor Assistant App are not needed. The sensor will arrive pre-configured with the factory default settings shown above.

Requirement:

- Bluetooth dongle (Belimo Part No: A-22G-A05)
- Bluetooth-capable smartphone
- Belimo Duct Sensor Assistant App (Google Play & Apple App Store)

Procedure:

- Plug the Bluetooth dongle into the sensor via the Micro-USB connector or by means of the interface PCB
- Connect Bluetooth-capable smartphone with Bluetooth dongle
- Select configuration in the Belimo Duct Sensor Assistant App

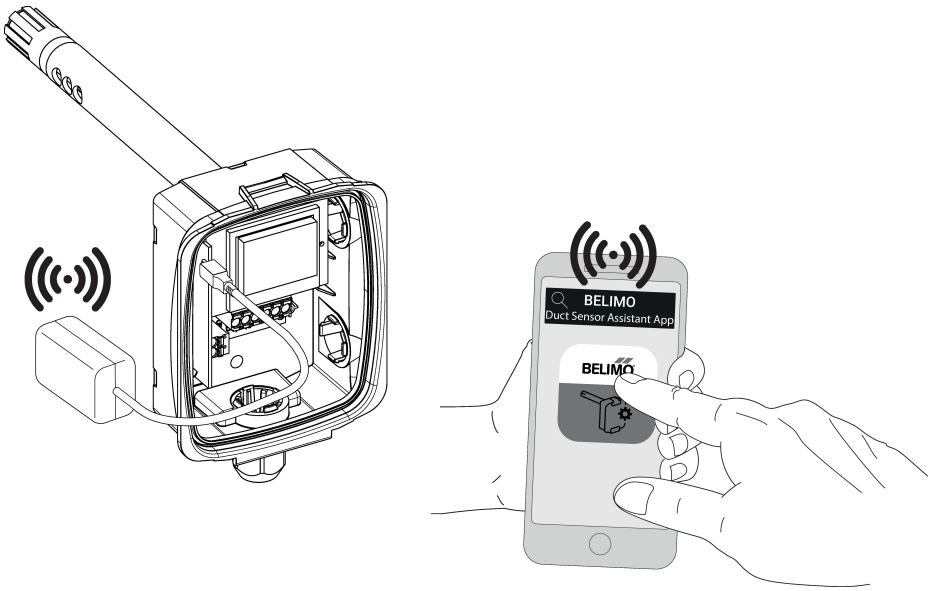

Wiring diagram

Supply from isolating transformer.

The wiring of Modbus RTU (RS-485) is to be carried out in accordance with applicable regulations (www.modbus.org). The device has switchable resistors for bus termination.

Modbus / BACnet: Supply and communication are not galvanically isolated. Connect earth signal of the devices with one another.

Wiring diagram

① and ⑤: Status LED
Slow flashing (0.5 Hz): Ok
Fast flashing (4 Hz): Error

② Red: Error
③ Yellow: Tx
④ Yellow: Rx

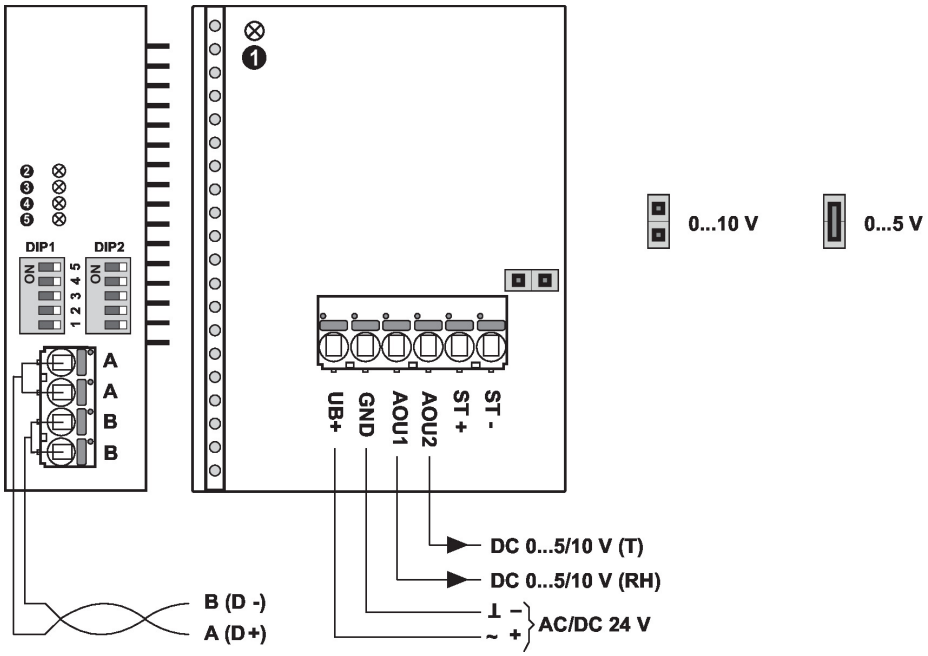

Detailed documentation

The separate document Sensor Modbus-Register informs about Modbus register, addressing, parity and bus termination (DIP1: address, DIP2: baud rate, parity, bus termination)

Wiring RS-485 Modbus RTU

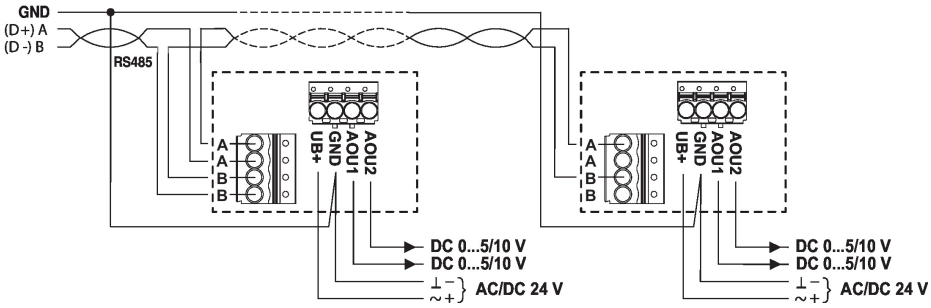

Dimensions

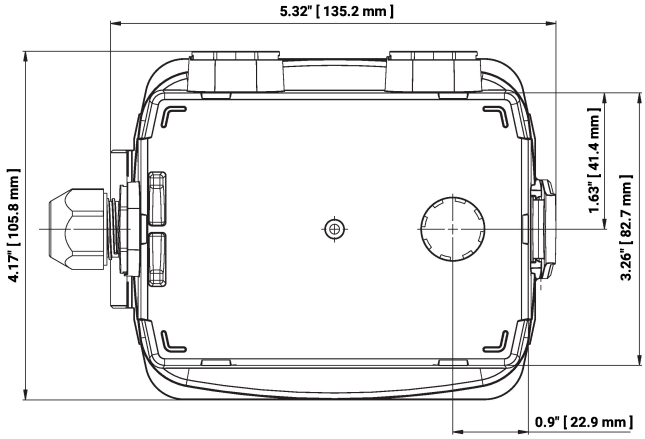

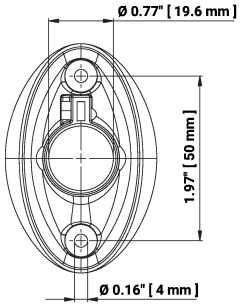

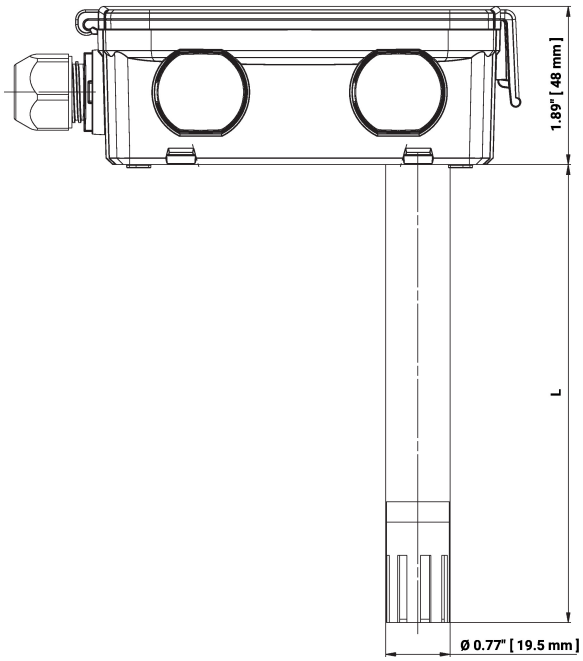

L = Probe length

Type	Probe length	Weight
22DTH-15M	140 mm	0.26 kg
22DTH-15Q	270 mm	0.32 kg

Further documentation

- Modbus Interface description
- Installation instructions