Duct sensor CO_2 / Humidity / Temperature

For measuring CO_2, with integrated temperature and humidity sensor. Dual channel CO_2 technology. With Modbus RTU communication and integrated 0...10 V outputs. IP65 / NEMA 4X rated housing.

Type Overview

Type	Communication	Output signal active CO_2	Output signal active temperature
22DTM-15	Modbus RTU	0...5 V, 0...10 V	0...5 V, 0...10 V

Technical data

Electrical data	Nominal voltage	AC/DC 24 V
	Nominal voltage range	AC 19...29 V / DC 15...35 V
	Power consumption AC	4.3 VA
	Power consumption DC	2.3 W
	Electrical connection	Pluggable spring loaded terminal block max. 2.5 mm^2
	Cable entry	Cable gland with strain relief 2x ø6 mm
Data bus communication	Communication	Modbus RTU
	Number of nodes	Modbus see interface description
Functional data	Medium	Air
	Voltage output	2 x 0...5 V, 0...10 V, min. resistance 10 kΩ
	Output signal active note	Output 0...5/10 V with Jumper adjustable
Measuring data	Measured values	CO_2 Relative humidity Absolute humidity Dew point Enthalpies Temperature
Specification CO_2	Sensing element technology	Non-dispersive infrared (NDIR) dual channel
	Measuring range	Default setting: 0...2000 ppm With A-22G-A05: 0...5000 ppm Over Modbus: 0...10000 ppm
	Accuracy	±(50 ppm + 3% of measured value)
	Long term stability	±50 ppm p.a.
	Calibration	Self-calibration Dual channel
	Time constant τ (63%) in the air duct	Typical 33 s @ 1 m/s
Specification temperature active	Measuring range	Adjustable via Modbus 0...50°C [32...122°F] (default setting) Attention: The maximum measuring range listed does not indicate the allowable fluid temperature for the sensor. Refer to safety data for the maximum fluid temperature limits.

Technical data

Specification temperature active	Accuracy temperature	±0.3°C @ 25°C [±0.5°F @ 77°F]
	Long term stability	±0.05°C p.a. @ 21°C [±0.09°F p.a. @ 70°F]
	Time constant τ (63%) in the air duct	Typical 125 s @ 3 m/s
Specification Humidity	Sensing element technology	Polymer-based capacitive sensor with stainless steel wire mesh filter
	Measuring range	Adjustable via Modbus Default setting: 0...100% RH
	Measuring range absolute humidity	Adjustable via Modbus Default setting: 0...50 g/m³
	Measuring range enthalpy	Adjustable via Modbus Default setting: 0...85 kJ/kg
	Measuring range dew point	Adjustable via Modbus Default setting: 0...50°C [-30...120°F]
	Accuracy	±2% between 0...80% RH @ 25°C
	Long term stability	±0.3% RH p.a. @ 21°C @ 50% RH
	Time constant τ (63%) in the air duct	Typical 10 s @ 3 m/s
Safety data	Protection class IEC/EN	III, Safety Extra-Low Voltage (SELV)
	Power source UL	Class 2 Supply
	Degree of protection IEC/EN	IP65
	Degree of protection NEMA/UL	NEMA 4X
	Housing	UL Enclosure Type 4X
	EU Conformity	CE Marking
	Certification IEC/EN	IEC/EN 60730-1
	Quality Standard	ISO 9001
	UL Approval	cULus acc. to UL60730-1A/-2-9/-2-13, CAN/CSA E60730-1/-2-9
	Type of action	Type 1
	Rated impulse voltage supply	0.8 kV
	Pollution degree	3
	Ambient humidity	Max. 95% RH, non-condensing
	Ambient temperature	0...50°C [32...122°F]
	Fluid humidity	Max. 95% RH, non-condensing
	Fluid temperature	0...50°C [32...122°F]
	Operating condition airflow	min. 0.3 m/s max. 12 m/s
Materials	Housing	Cover: PC, orange Bottom: PC, orange Seal: NBR70, black UV resistant
	Cable gland	PA6, black
	Probe material	PA6, black

Safety notes

This device has been designed for use in stationary heating, ventilation and air-conditioning systems and must not be used outside the specified field of application. Unauthorised modifications are prohibited. The product must not be used in relation with any equipment that in case of a failure may threaten humans, animals or assets.

Ensure all power is disconnected before installing. Do not connect to live/operating equipment.

Only authorised specialists may carry out installation. All applicable legal or institutional installation regulations must be complied with during installation.

The device contains electrical and electronic components and must not be disposed of as household refuse. All locally valid regulations and requirements must be observed.

Product Features

CO_2 dual channel technology

All CO_2 sensors are subject to drift, which is caused by the ageing process of the components and requires regular calibration and adjustment or replacement of the sensors. The dual-channel technology minimises this drift by compensating for the majority of the ageing effects of the measuring channel through adjustment with a reference channel.

This makes it possible to use dual-channel sensors in applications with 24/7 occupancy. Regular calibration with fresh outdoor air, as is the case with sensors with ABC logic, is not necessary with dual-channel sensors. It is recommended to recalibrate the sensor after 5 years of operation.

Remarks

General remarks concerning sensors

Sensing devices with a transducer should always be operated in the middle of the measuring range to avoid deviations at the measuring end points. The ambient temperature of transducer electronics should be kept constant. The transducers must be operated at a constant supply voltage (±0.2 V). When switching the supply voltage on/off, onsite power surges must be avoided.

Remark: Occurring draft leads to a better carrying-off of dissipative power at the sensor. Thus temporally limited fluctuations might occur upon temperature measurement.

Build-up of self-heating by electrical dissipative power

Temperature sensors with electronic components always have a dissipative power which affects the temperature measurement of the ambient air. The dissipation in active temperature sensors shows a linear increase with rising operating voltage. The dissipative power should be taken into account when measuring temperature.

In case of a fixed operating voltage (±0.2 V), this is normally done by adding or reducing a constant offset value. As Belimo transducers work with a variable operating voltage, for reasons of production engineering only one operating voltage can be taken into consideration. Transducers 0...10 V / 4...20 mA have a standard setting at an operating voltage of DC 24 V. This means that at this voltage, the expected measuring error of the output signal will be the least. For other operating voltages, the offset error will be increased by a changing power loss of the sensor electronics.

If a readjustment directly at the active sensor should be necessary during later operation, this can be done with the following adjustment methods.

- For sensors with NFC or dongle with the corresponding Belimo app
- For sensors with a trimming potentiometer on the sensor board
- For bus sensors via bus interface with a corresponding software variable

Requirements to be met by the medium

To ensure the ongoing and optimal functioning of the sensor, it is imperative that the air being measured is free of dust or other contaminants that could accumulate on the sensor element.

Application notice for humidity sensors

The humidity sensor is extremely sensitive. Touching the sensor element or exposing it to aggressive substances like chlorine, ozone, ammonia, hydrogen peroxide or ethanol (i.e. as a cleaning agent) may affect the measurement accuracy.

Long-term operation outside the recommended conditions (5...50°C and 20...80% RH) can result in a temporary offset. After returning to the recommended range, this effect will disappear.

Parts included

Description	Type
Mounting flange for duct sensor 19.5 mm, up to max. 120°C [248°F], Plastic	A-22D-A35
Cable Gland with strain relief ø6...8 mm	

Accessories

Optional accessories

Description	Type
Replacement filter sensor probe tip, wire mesh, Stainless steel	A-22D-A06
Connection adapter flex conduit, M20x1.5, for cable gland 1x 6 mm, Multipack 10 pcs.	A-22G-A01.1
Connection adapter flex conduit, M20, for cable gland 2x 6 mm, Multipack 10 pcs.	A-22G-A02.1
Mounting plate L housing	A-22D-A10

Tools

Description	Type
Belimo Duct Sensor Assistant App	Belimo Duct Sensor Assistant App
Bluetooth dongle for Belimo Duct Sensor Assistant App	A-22G-A05

* Bluetooth dongle A-22G-A05

Certified and available in North America, European Union, EFTA States and UK.

Service

Tools connection

This sensor can be operated and configured using the Belimo Duct Sensor Assistant App.

When using the Belimo Duct Sensor Assistant App, the bluetooth dongle is required to enable communication between the app and the Belimo sensor.

For standard operation and configuration of the sensor, the bluetooth dongle and the Belimo Duct Sensor Assistant App are not needed. The sensor will arrive pre-configured with the factory default settings shown above.

Requirement:

- Bluetooth dongle (Belimo Part No: A-22G-A05)
- Bluetooth-capable smartphone
- Belimo Duct Sensor Assistant App (Google Play & Apple App Store)

Procedure:

- Plug the Bluetooth dongle into the sensor via the Micro-USB connector or by means of the interface PCB
- Connect Bluetooth-capable smartphone with Bluetooth dongle
- Select configuration in the Belimo Duct Sensor Assistant App

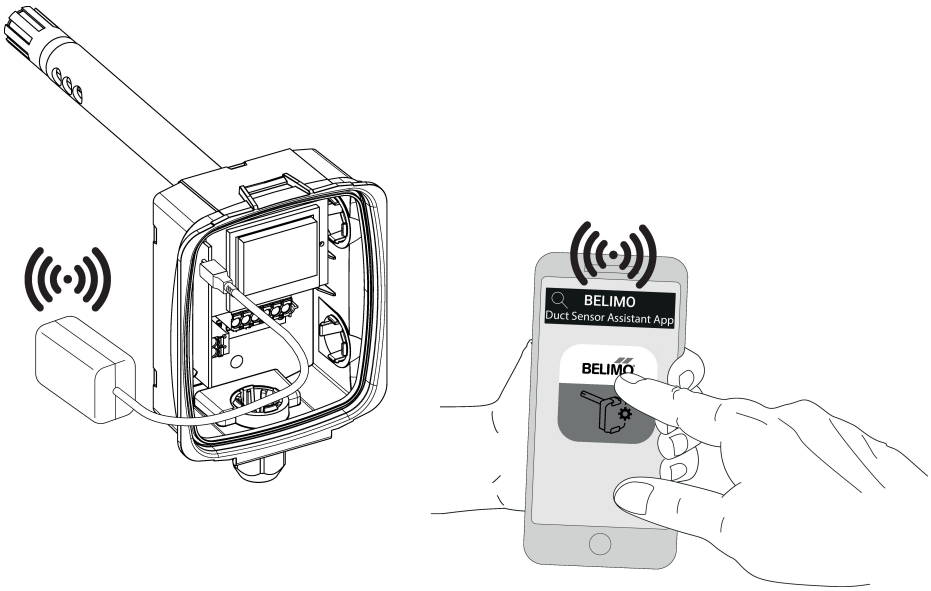

Wiring diagram

Supply from isolating transformer.

The wiring of Modbus RTU (RS-485) is to be carried out in accordance with applicable regulations (www.modbus.org). The device has switchable resistors for bus termination.

Modbus / BACnet: Supply and communication are not galvanically isolated. Connect earth signal of the devices with one another.

Wiring diagram

① and ⑤: Status LED
Slow flashing (0.5 Hz): Ok
Fast flashing (4 Hz): Error

② Red: Error
③ Yellow: Tx
④ Yellow: Rx

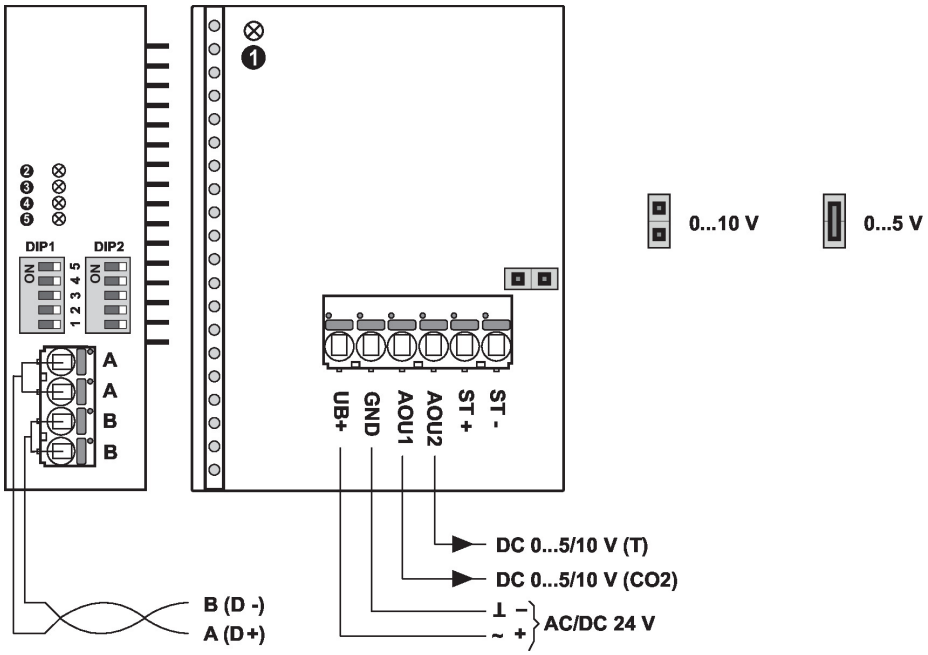

Detailed documentation

The separate document Sensor Modbus-Register informs about Modbus register, addressing, parity and bus termination (DIP1: address, DIP2: baud rate, parity, bus termination)

Wiring RS-485 Modbus RTU

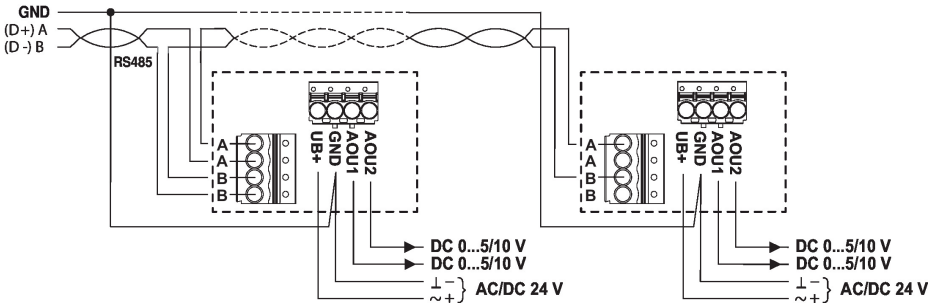

Dimensions

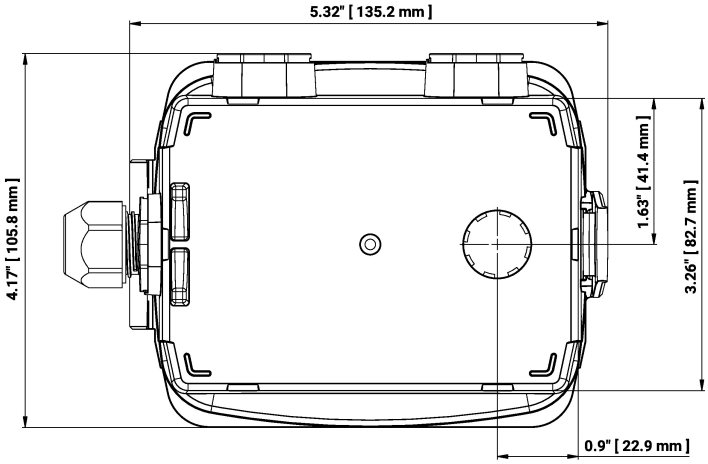

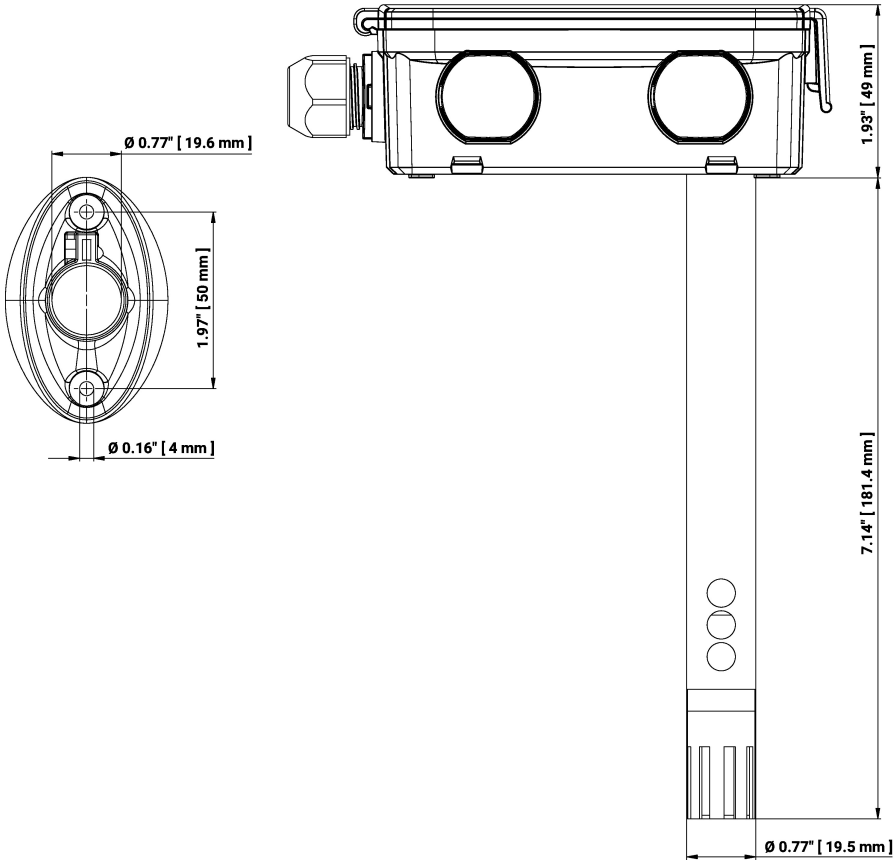

Type	Probe length	Weight
22DTM-15	180 mm	0.28 kg

Further documentation

- Modbus Interface description
- Installation instructions