Flow sensor

• Ultrasonic flow sensor for water systems containing water or water-glycol mixtures. It continuously measures the glycol content of the medium and compensates for it to ensure an accurate measurement.
• The flow sensor is installed in the system using standard flanges in accordance with EN 1092. The power supply is AC/DC 24 V and the output signal is 0...10 V or communicative via BACnet MSTP, Modbus RTU or MP-Bus.
• The flow rate can be accumulated.
• Configuration is done with Belimo Assistant 2 via NFC technology.

Picture may differ from product

Type Overview

Type	DN	DN ["]	FS [l/s]	FS [m³/h]	Kvs theor. [m³/h]	Δp [kPa]	PN
22PF-1UJ-1	65	2 1/2	10.6	38	92	17.1	16
22PF-1UK-1	80	3	16.7	60	124	23.4	16
22PF-1UL-1	100	4	25.0	90	226	15.9	16
22PF-1UM-1	125	5	41.7	150	328	20.9	16
22PF-1UN-1	150	6	62.5	225	469	23	16

FS: Full scale, maximum flow

Δp: Pressure drop at FS

Kvs theor.: theoretical Kvs value for pressure drop calculation

Technical data

Electrical data	Nominal voltage	AC/DC 24 V
	Nominal voltage frequency	50/60 Hz
	Nominal voltage range	AC 19.2...28.8 V / DC 21.6...28.8 V
	Power consumption AC	2.2 VA
	Power consumption DC	1.1 W
	Connection supply	Cable , 6x 0.75 mm²
Data bus communication	Communication	BACnet MS/TP Modbus RTU MP-Bus
	Number of nodes	BACnet / Modbus see interface description MP-Bus max. 8 (16)
Functional data	Medium	Water Water-glycol mixture
	Configuration	via NFC, Belimo Assistant 2
	Voltage output	1 x 0...10 V, 0.5...10 V, 2...10 V or user defined
	Analogue output	DC 0...10 V (factory setting), selectable via NFC min. resistance 10 kΩ
	PN Note	PN = PS
	Pipe connection	Flange according to EN 1092-2
	Installation orientation	upright to horizontal
	Servicing	maintenance-free
Measuring data	Measured values	Flow Temperature

Technical data

Measuring data	Measuring fluid	Water, water with glycol up to max. 60% vol.
	Measuring principle	Ultrasonic flow measurement
Specification Flow	Min. flow measurement	0.7% of FS
	Measuring accuracy flow	±2%, according to class 2 EN 1434, glycol 0% vol.
	Measuring accuracy flow note	@ 5...120°C Inlet section ≥5x DN
Glycol monitoring	Measurement display glycol	0...60%
	Measuring accuracy glycol monitoring	±4%
Safety data	Protection class IEC/EN	III, Protective Extra-Low Voltage (PELV)
	Degree of protection IEC/EN	IP54
	Degree of protection NEMA/UL	NEMA 2
	EMC	CE according to 2014/30/EU
	Certification IEC/EN	IEC/EN 60730-1:11 and IEC/EN 60730-2-15:10
	Quality Standard	ISO 9001
	Type of action	Type 1
	Rated impulse voltage supply	0.8 kV
	Pollution degree	3
	Ambient humidity	Max. 95% RH, non-condensing
	Ambient temperature	-30...55°C [-22...131°F]
	Fluid temperature	-10...120°C [14...248°F]
	Fluid temperature note	At a fluid temperature of <2°C [<36°F], frost protection must be guaranteed The fluid temperature range also represents the applicable metal body temperature range (min./max.).
	Storage temperature	-40...80°C [-40...176°F]
Materials	Cable	PVC
	Fluid wetted parts	EN-GJL-250 (GG 25), with protective paint, stainless steel, PEEK, EPDM

Safety notes

This device has been designed for use in stationary heating, ventilation and air-conditioning systems and must not be used outside the specified field of application, especially in aircraft or in any other airborne means of transport.

Outdoor application: Only possible if no (sea) water, snow, ice, sunlight or aggressive gases act directly on the device and if it is ensured that the ambient conditions remain within the limit values specified in the data sheet at all times.

Only authorised specialists may carry out installation. All applicable legal or institutional installation regulations must be complied with during installation.

The device contains electrical and electronic components and must not be disposed of as household refuse. All locally valid regulations and requirements must be observed.

Product features

Operating mode

The ultrasonic flow sensor is equipped with a flow pipe, two ultrasonic paths and an electronic circuit. A temperature sensor is mounted in the flow pipe to compensate the temperature effects.

A sensor error occurs when the ultrasonic path is interrupted (air bubbles in the system, connection to ultrasonic transducers interrupted).

Detailed error reports are available via Belimo Assistant 2 or BACnet, Modbus and MP-Bus.

Collective error report display

If the output signal is set to 0.5...10 V or 2...10 V and also to flow, a collective error report is displayed with a voltage of 0.3 V. This indicates a measurement error of the temperature sensor or flow sensor.

Functions

Wires 6 and 7 are for the Modbus or BACnet communication. The physical bus address can be defined via the app.

Wire 5 can be configured with the app as an output signal 0...10 V (factory setting), 0.5...10 V, 2...10 V, user defined or as an MP-Bus communication. For the output signal, the flow or the fluid temperature can be selected.

The output signal can be scaled to achieve a better resolution. Factory setting is 10 V = FS (see diagram, example of output voltage characteristic curve).

Example output voltage characteristic 22PF-1UL

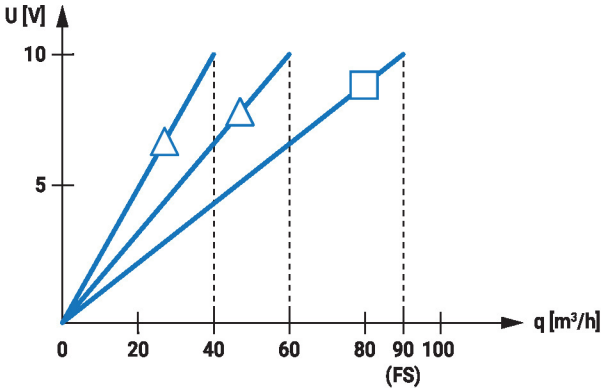

U = Output voltage
q = Measured flow
Δ = Alternative settings
□ = Factory setting

Patented glycol compensation

Glycol changes the viscosity of the heat transfer fluid and as a result affects the measured volumetric flow. Without glycol compensation, volumetric flow measurements can show errors of as much as 30 percent. The patented automatic glycol compensation significantly reduces the degree of measurement error.

Selection of the fluid used:

– Water
– Propylene glycol
– Ethylene glycol
– Antifrogen L
– Antifrogen N
– DowCal 200
– DowCal 100

Determining the glycol concentration requires recurring temperature changes of min. 2 K within the flow sensor during operation. Installing the flow sensor in the temperature-variable part of the system is recommended to ensure these temperature changes.

Product features

Pressure drop

The pressure drop across the flow sensor to achieve a desired flow q can be calculated using the theoretical Kvs value (see type overview) and the formula below.

Formula pressure drop

$$\Delta p = \left(\frac{q}{k_{vs}theor.}\right)^2 * 100\ kPa$$

Δp: kPa
q: m³/h
kvstheor.: m³/h

Example pressure drop calculation

22PF-1UL (DN 100)
K_{vs} theor. = 226 m³/h
q = 90 m³/h

$$\Delta p = \left(\frac{q}{K_{vs}\ theor.}\right)^2 * 100\ kPa = \left(\frac{90\ m^3/h}{226\ m^3/h}\right)^2 * 100\ kPa = 15.9\ kPa$$

Pressure drop diagram

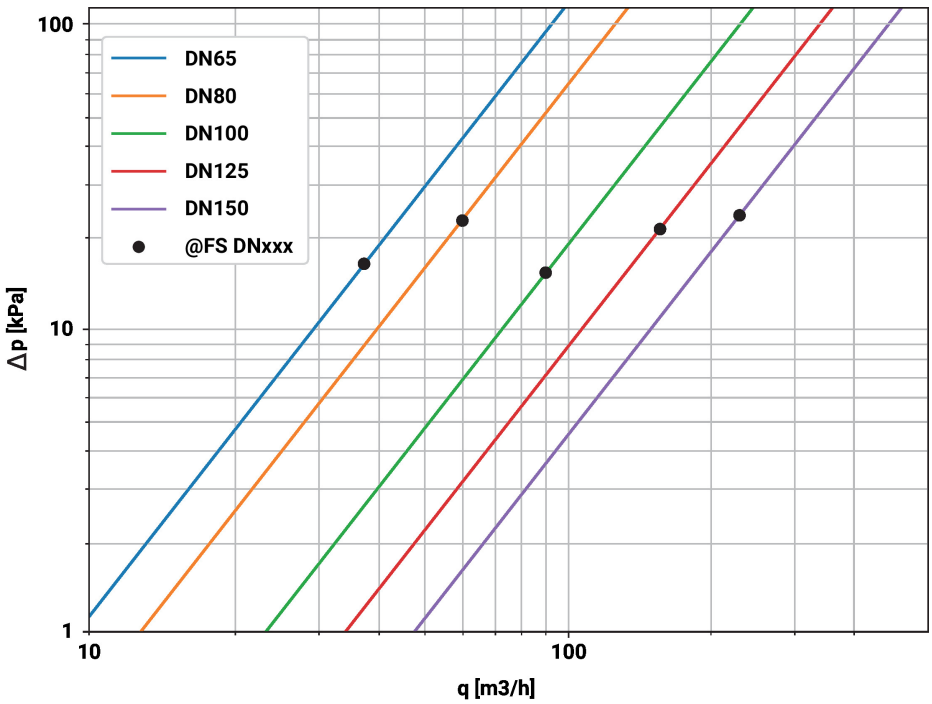

Δp = Pressure drop
q = Measured flow

Product features

Measuring accuracy

Measuring accuracy for water (glycol 0% vol.):

±(2 + 0.013 FS/q)% of the measured value (q), but not more than ±5%

At a temperature range of 5...120°C [41...248°F].

Measuring accuracy for water + glycol (glycol 0...60% vol.)

±5% (@ 13...100% FS)

±0.01 FS, but not more than 30% of q (@ 0.7...13% FS)

At a temperature range of -20...120°C [-4...248°F].

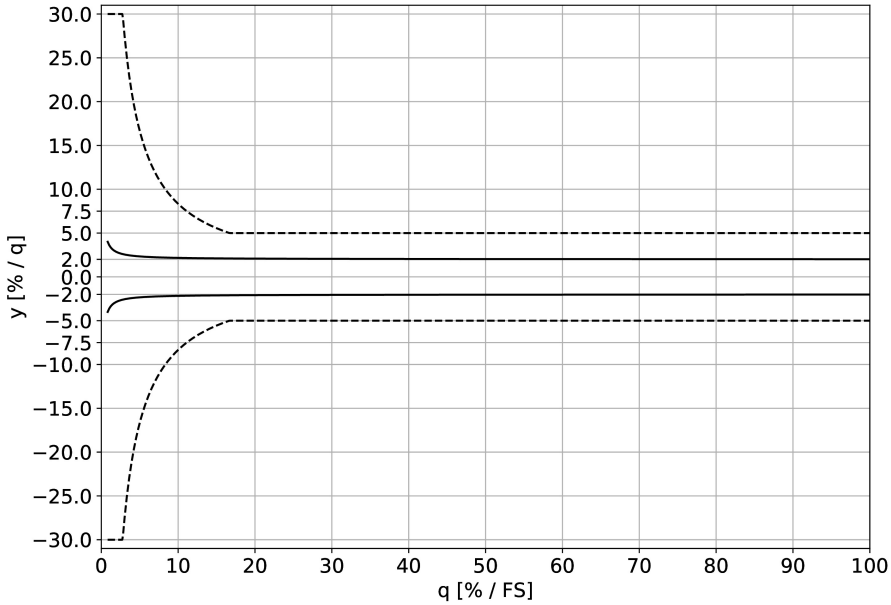

— Water
---- Water + glycol (≤60% glycol)
y = Measuring accuracy
q = Measured flow
FS = Full scale, maximum flow

Installation notes

Permissible installation orientation

The sensor can be installed upright to horizontal. The sensor may not be installed in a hanging position.

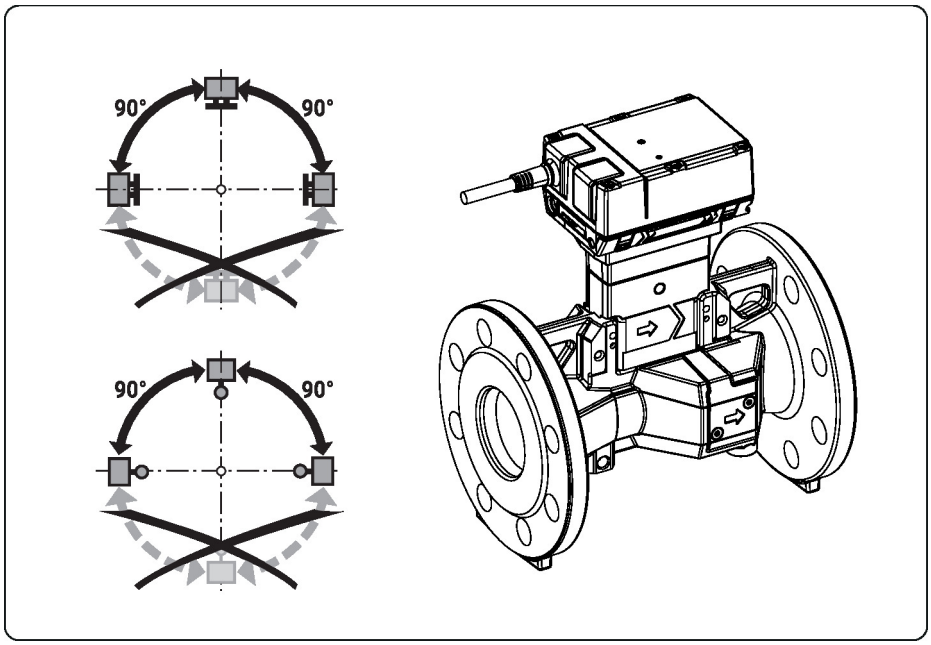

Installation in return

Installation in the return is recommended.

Installation notes

Inlet section

A flow calming section or inlet section in the direction of flow must be maintained in front of the flow sensor to achieve the specified measuring accuracy. Its dimensions should be at least 5x DN.

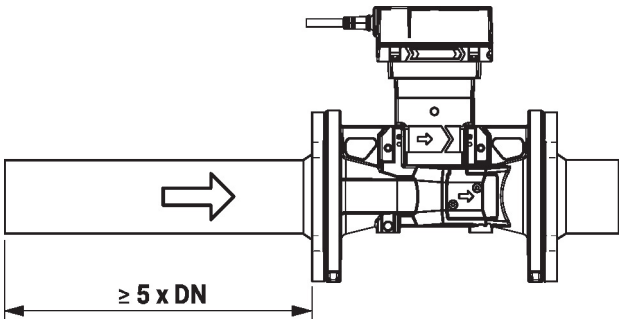

Water quality requirements

The water quality requirements specified in VDI 2035 must be adhered to.

Servicing

Sensors are maintenance-free.

Before any service work on the sensor is carried out, it is essential to isolate the sensor from the power supply (by unplugging the electrical cables if necessary). Any pumps in the part of the piping system concerned must also be switched off and the appropriate slide valves closed (allow all components to cool down first if necessary and always reduce the system pressure to ambient pressure level).

The system must not be returned to service until the sensor has been correctly reassembled in accordance with the instructions and the pipeline has been refilled by professionally trained personnel.

Flow direction

The direction of flow, specified by an arrow on the housing, is to be complied with, since otherwise the flow rate will be measured incorrectly.

Avoiding cavitation

To avoid cavitation, the system pressure at the outlet of the flow sensor must be a minimum of 1.0 bar [15 psi] at FS (maximum measurable flow) and temperatures up to 90°C [194°F].

At a temperature of 120°C [248°F] the system pressure at the outlet of the flow sensor must be at least 2.5 bar [37 psi].

Cleaning of pipes

Before installing the flow sensor, the loop must be thoroughly rinsed to remove impurities.

Prevention of stresses

The flow sensor must not be subjected to excessive stress caused by pipes or fittings.

Accessories

Tools

Description	Type
Service tool for wired and wireless setup, on-site operation and troubleshooting.	Belimo Assistant 2
Belimo Assistant Link Bluetooth and USB to NFC and MP-Bus converter for configurable and communicative devices	LINK.10

Service

Using Belimo Assistant 2, device parameters can be modified. Belimo Assistant 2 can operate on a smartphone, tablet or PC. The available connection options vary depending on the hardware on which Belimo Assistant 2 is installed.

For more information about Belimo Assistant 2, refer to the Quick Guide – Belimo Assistant 2.

Service

Wireless connection

Belimo devices marked with the NFC logo can be accessed either directly with an NFC-capable smartphone or with a Bluetooth-capable smartphone connected to Belimo Assistant Link.

Requirement:

- NFC- or Bluetooth-capable smartphone or tablet
- Belimo Assistant 2 (Google Play and Apple App Store)

Align the NFC-capable smartphone or Belimo Assistant Link with the device's NFC logo so that both NFC antennas are superposed.

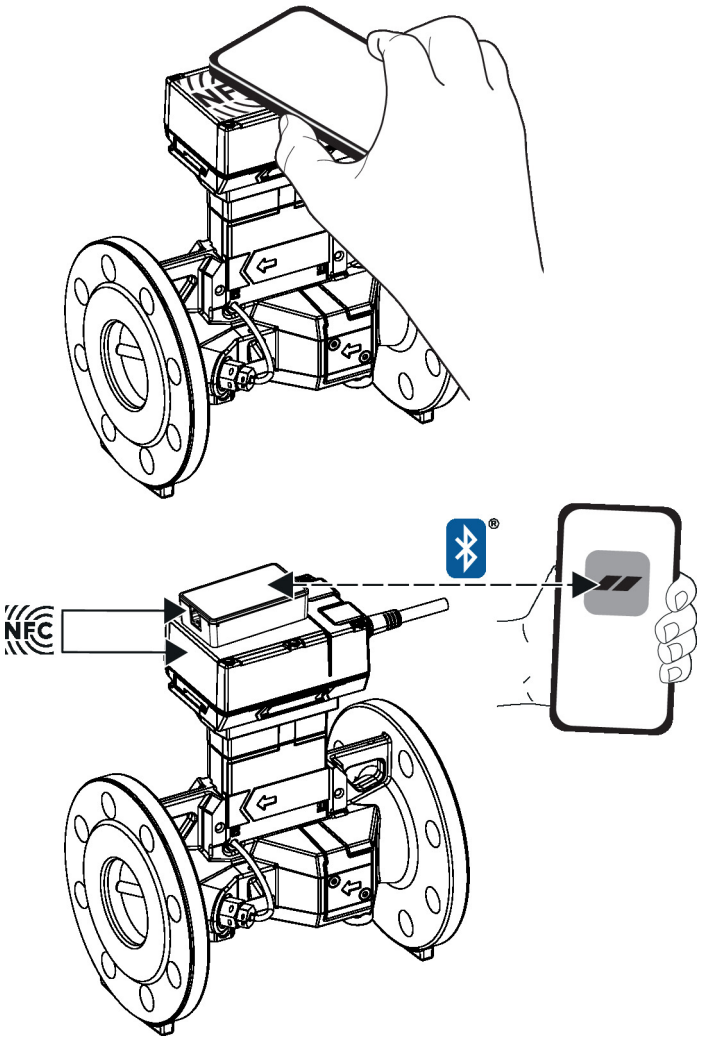

Service

Wired connection

Belimo devices can be accessed by connecting Belimo Assistant Link to the USB port on a PC or laptop and to the service socket or MP-Bus wire on the device.

Belimo Assistant 2 acts as MP client. Therefore, no other MP client shall be connected to the device.

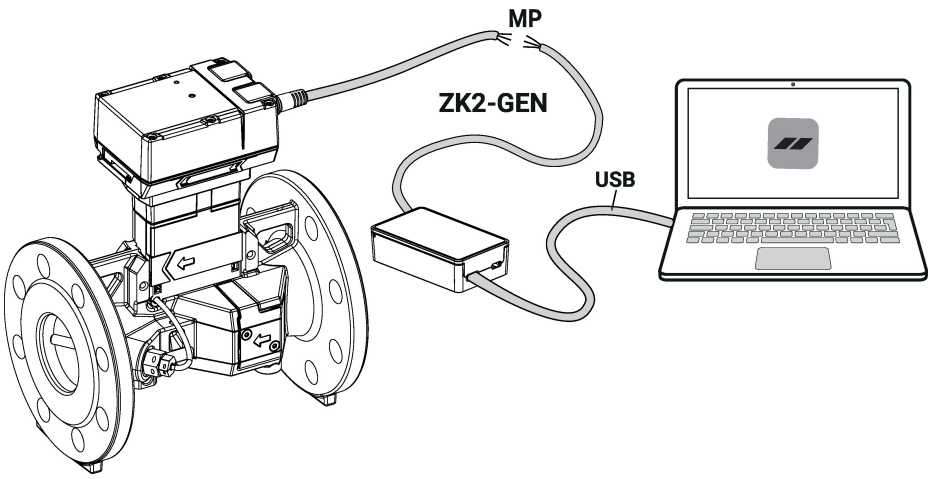

Wiring diagram

Supply from isolating transformer.

The wiring of the line for BACnet MS/TP / Modbus RTU is to be carried out in accordance with applicable RS-485 regulations.

Modbus / BACnet: Supply and communication are not galvanically isolated. Connect earth signal of the devices with one another.

Sensor connection: An additional sensor can optionally be connected to the flow sensor. This can be an active sensor with output DC 0...10 V (max. DC 0...32 V with resolution 30 mV) or a switching contact (switching current min. 16 mA @ 24 V). Thus the analogue signal of the sensor can be easily digitised with the flow sensor and transferred to the corresponding bus system.

Analogue output: An analogue output (wire 5) is available on the flow sensor. It can be selected as 0...10 V, 0.5...10 V, 2...10 V or user defined. For example, the flow rate or the temperature of the temperature sensor (Pt1000 - EN 60751, 2-wire technology) can be output as an analogue value.

Wire colours:
1 = black
2 = red
3 = white
5 = orange
6 = pink
7 = grey

Functions:
1 = Com
2 = AC/DC 24 V
3 = Sensor (optional)
5 = 0...10 V, MP-Bus
C1 = D- (wire 6)
C2 = D+ (wire 7)

Wiring diagram

BACnet MS/TP / Modbus RTU

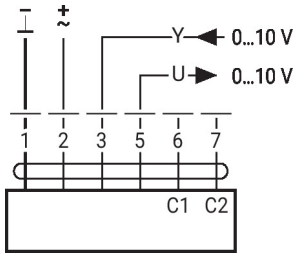

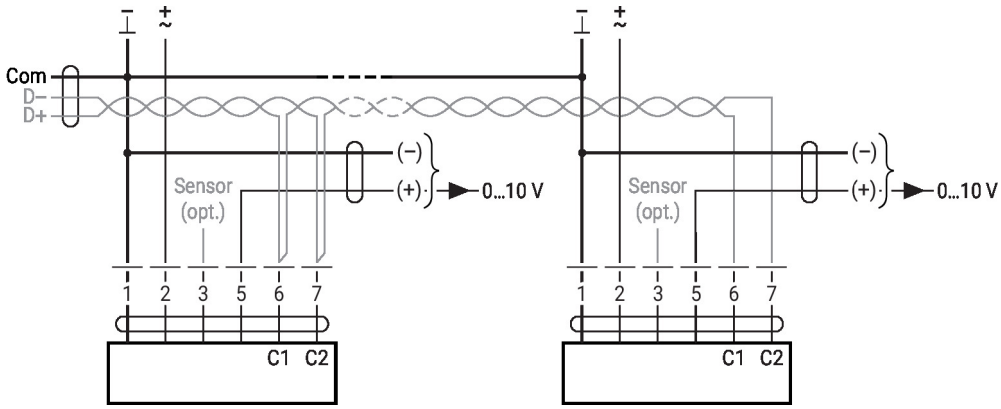

MP-Bus, supply via 3-wire connection

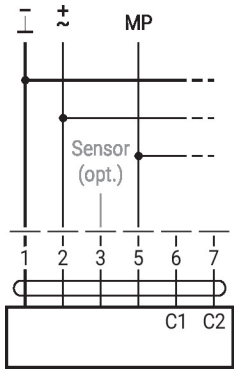

MP-Bus via 2-wire connection, local power supply

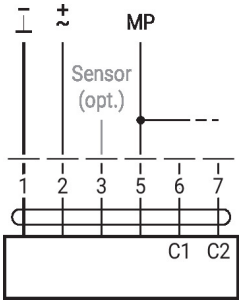

Connection with active sensor

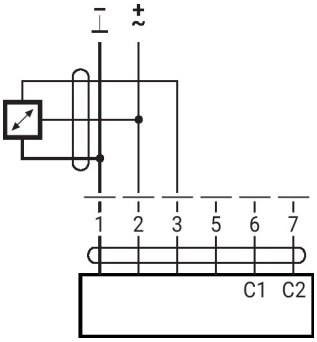

Connection with switching contact

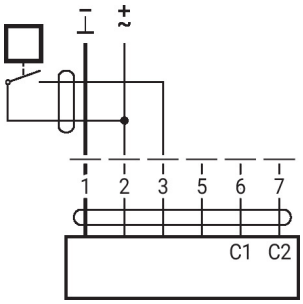

Dimensions

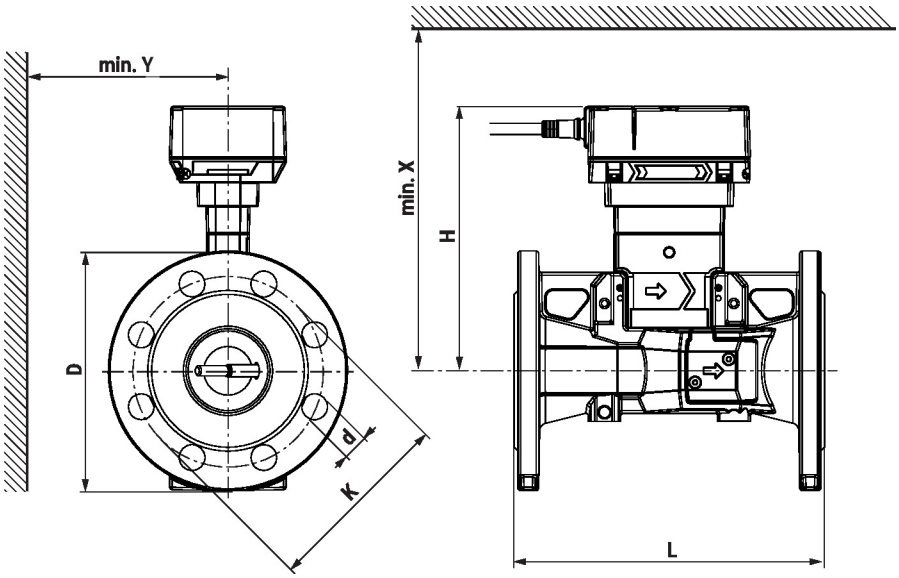

Type	DN	DN ["]	L [mm]	H [mm]	D [mm]	d [mm]	K [mm]	X [mm]	Y [mm]	Weight
22PF-1UJ-1	65	2 1/2	240	204	185	4 x 20	145	260	150	13 kg
22PF-1UK-1	80	3	260	209	200	8 x 20	160	260	160	16 kg
22PF-1UL-1	100	4	262	219	229	8 x 20	180	270	175	21 kg
22PF-1UM-1	125	5	314	227	254	8 x 20	210	280	190	28 kg
22PF-1UN-1	150	6	334	236	280	8 x 23	240	290	200	35 kg

Further documentation

- Overview MP Cooperation Partners
- Description Data-Pool Values
- BACnet Interface description
- Modbus Interface description
- Installation instructions
- Quick Guide – Belimo Assistant 2