Differential pressure switch

For monitoring overpressure, vacuum and differential pressure of air or other non-combustible, non-aggressive gases for both HVAC and energy management applications. With setpoint adjustment and automatic reset.

Type Overview

Type	Measuring range [Pa]	Repeating accuracy	Switching differential (pressure)	Burst pressure
01APS-10R	20...300	±5%, min. ±5 Pa	10 Pa	10 kPa
01APS-10U	50...500	±2.5%, min. ±5 Pa	20 Pa	10 kPa
01APS-101	200...1000	±1%, min. ±5 Pa	100 Pa	10 kPa
01APS-104	500...2500	±1%, min. ±5 Pa	150 Pa	10 kPa
01APS-105	1000...5000	±1%, min. ±5 Pa	250 Pa	10 kPa

Technical data

Electrical data	Electrical connection	Terminals for wire 0.5...1.5 mm^2
	Cable entry	Cable gland with strain relief ø5...10 mm
Functional data	Medium	Air
	Output signal pressure switch note	Contact current max. 1.0 A / AC 250 V
	Service life	Min. 1'000'000 switching operations
Measuring data	Measured values	Differential pressure
	Measuring fluid	Air, non-combustible and non-aggressive gases
Specification Pressure	Measuring range	20...300 Pa
	Long term stability	≤±15% deviation over 250'000 operations/ cycles acc. EN1854
Safety data	Degree of protection IEC/EN	IP54
	Degree of protection NEMA/UL	NEMA 13
	Low voltage directive	CE according to 2014/35/EU
	EU Conformity	CE Marking
	Certification IEC/EN	IEC/EN 60730-1
	Quality Standard	ISO 9001
	Ambient humidity	Max. 95% RH, non-condensing
	Ambient temperature	-20...85°C [-4...185°F]
	Fluid temperature	-20...85°C [-4...185°F]
	Storage temperature	-40...85°C [-40...185°F]
Materials	Housing	Bottom Part: PA 6.6 Top Cover: PS

Safety notes

This device has been designed for use in stationary heating, ventilation and air-conditioning systems and must not be used outside the specified field of application. Unauthorised modifications are prohibited. The product must not be used in relation with any equipment that in case of a failure may threaten humans, animals or assets.

Ensure all power is disconnected before installing. Do not connect to live/operating equipment.

Only authorised specialists may carry out installation. All applicable legal or institutional installation regulations must be complied with during installation.

The device contains electrical and electronic components and must not be disposed of as household refuse. All locally valid regulations and requirements must be observed.

Installation notes

Permissible installation orientation

The specifications for the switching pressure refer to a vertical installation orientation, which is also recommended with downward pressure ports. For horizontal installation orientation with upwards directed AMP connecting lugs, the switching point is approx. 20 Pa higher.

It is not permitted to mount the differential pressure switch upside down!

Parts included

PVC tube 2 m
2x duct connector (plastic)
Screws

Accessories

Optional accessories

Description	Type
Mounting bracket L form for 01APS-.., Metal	A-22AP-A06
Mounting bracket S form for 01APS-.., Metal	A-22AP-A07
Cable entry, M20x1.5, for 01APS-.., Multipack 10 pcs.	A-22AP-A11.1
Duct connector kit for 01APS-.., PVC tube 2 m, 2x duct connector (plastic), Multipack 50 pcs.	A-22AP-A05.1
Duct connector, Plastic, L 80 mm, Tube connection 6 mm for 01APS-.., Multipack 90 pcs.	A-22AP-A09.1

Wiring diagram

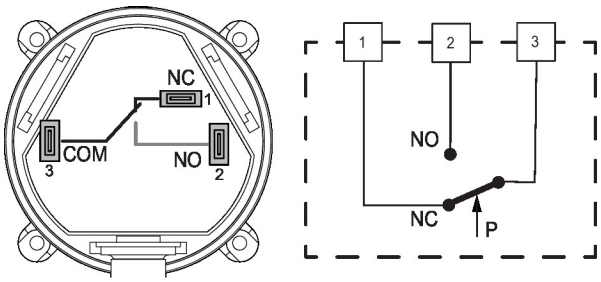

Dimensions

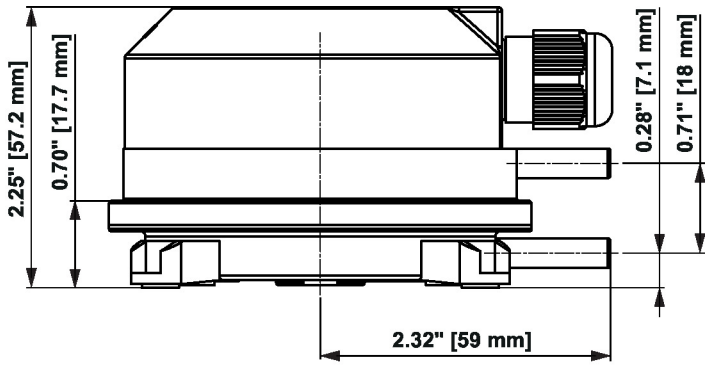

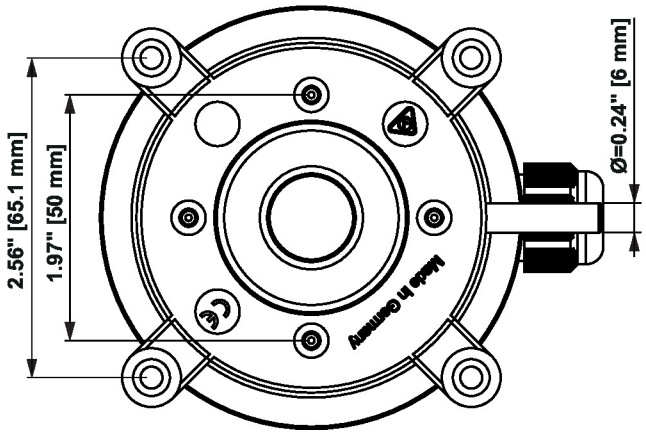

Type	Weight
01APS-10R	0.12 kg
01APS-10U	0.12 kg
01APS-101	0.12 kg
01APS-104	0.12 kg
01APS-105	0.12 kg

Further documentation

- Installation instructions