Rotary actuator fail-safe for adjusting dampers in technical building installations

- Air damper size up to approx. 6 m²
- Torque motor 30 Nm
- Nominal voltage AC 100...240 V
- Control Open/close

Picture may differ from product

Technical data

Electrical data	Nominal voltage	AC 100...240 V
	Nominal voltage frequency	50/60 Hz
	Nominal voltage range	AC 85...265 V
	Power consumption in operation	9 W
	Power consumption in rest position	4.5 W
	Power consumption for wire sizing	21 VA
	Connection supply / control	Cable 1 m, 2x 0.75 mm² (halogen-free)
	Parallel operation	Yes (note the performance data)
Functional data	Torque motor	30 Nm
	Torque fail-safe	30 Nm
	Direction of motion motor	selectable by mounting L/R
	Direction of motion fail-safe	selectable by mounting L/R
	Manual override	by means of hand crank and locking switch
	Angle of rotation	Max. 95°
	Angle of rotation note	adjustable starting at 33% in 5% steps (with mechanical end stop)
	Running time motor	75 s / 90°
	Running time fail-safe	<20 s @ -20...50°C, <60 s @ -30°C
	Sound power level, motor	56 dB(A)
	Sound power level, fail-safe	71 dB(A)
	Mechanical interface	Universal shaft clamp 12...26.7 mm
	Position indication	Mechanical
	Service life	Min. 60'000 fail-safe positions
Safety data	Protection class IEC/EN	II, reinforced insulation
	Degree of protection IEC/EN	IP54
	EMC	CE according to 2014/30/EU
	Low voltage directive	CE according to 2014/35/EU
	Certification IEC/EN	IEC/EN 60730-1 and IEC/EN 60730-2-14
	Hygiene test	According to VDI 6022 Part 1 / SWKI VA 104-01, cleanable and disinfectable, low emission
	Type of action	Type 1.AA
	Rated impulse voltage supply / control	2.5 kV
	Pollution degree	3
	Ambient humidity	Max. 95% RH, non-condensing

Technical data

Safety data	Ambient temperature	-30...50°C [-22...122°F]
	Storage temperature	-40...80°C [-40...176°F]
	Servicing	maintenance-free
Weight	Weight	4.6 kg

Safety notes

- This device has been designed for use in stationary heating, ventilation and air-conditioning systems and must not be used outside the specified field of application, especially in aircraft or in any other airborne means of transport.
- Outdoor application: only possible in case that no (sea) water, snow, ice, insolation or aggressive gases interfere directly with the device and that it is ensured that the ambient conditions remain within the thresholds according to the data sheet at any time.
- Caution: Mains voltage!
- Only authorised specialists may carry out installation. All applicable legal or institutional installation regulations must be complied with during installation.
- The device may only be opened at the manufacturer's site. It does not contain any parts that can be replaced or repaired by the user.
- Cables must not be removed from the device.
- To calculate the torque required, the specifications supplied by the damper manufacturers concerning the cross-section and the design, as well as the installation situation and the ventilation conditions must be observed.
- The device contains electrical and electronic components and must not be disposed of as household refuse. All locally valid regulations and requirements must be observed.

Product features

Operating mode
The actuator moves the damper to the operating position at the same time as tensioning the return spring. The damper is turned back to the safety position by spring energy when the supply voltage is interrupted.

Simple direct mounting
Simple direct mounting on the damper shaft with a universal shaft clamp, supplied with an anti-rotation mechanism to prevent the actuator from rotating.

Shaft stabiliser
The shaft clamp of the spring-return actuator is factory-equipped with a shaft stabiliser for the stabilisation of the combination of damper, damper shaft and actuator.

This is comprised of two plastic support rings and must be left in place, partially, or completely removed, depending on the installation situation and the shaft diameter.

Manual override
By using the hand crank the damper can be actuated manually and engaged with the locking switch at any position. Unlocking is carried out manually or automatically by applying the operating voltage.

Adjustable angle of rotation
Adjustable angle of rotation with mechanical end stops.

High functional reliability
The actuator is overload protected, requires no limit switches and automatically stops when the end stop is reached.

Accessories

Mechanical accessories

Description	Type
End stop indicator	IND-EFB
Shaft clamp reversible, clamping range ø12...26.7 mm	K9-2
Damper crank arm Slot width 8.2 mm, clamping range ø14...25 mm	KH10
Actuator arm Slot width 8.2 mm	KH-EFB
Mounting kit for linkage operation for flat and side installation	ZG-EFB
Anti-rotation mechanism 230 mm, Multipack 20 pcs.	Z-ARS230

Accessories

Description	Type
Hand crank 63 mm	ZKN2-B

Electrical installation

Caution: Mains voltage!

Parallel connection of other actuators possible. Observe the performance data.

Wire colours:
1 = blue
2 = brown

AC 230 V, open/close

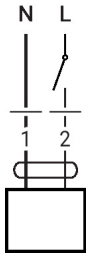

Installation notes

The shaft stabiliser must nevertheless be used with installation of the anti-rotation mechanism on the opposite side of the shaft clamp and a shaft diameter <20 mm.

Shaft stabiliser long shaft mounting

In the case of long shaft installation the use of the shaft stabiliser at a shaft diameter of

- 12...20 mm is necessary
- 21...26.7 mm is not necessary and can be removed

Shaft stabiliser short shaft mounting

In the case of short shaft installation, the necessity of the shaft stabiliser is dispensed with. It can be removed or – if the shaft length permits this – left in the shaft clamp.

Dimensions

Spindle length

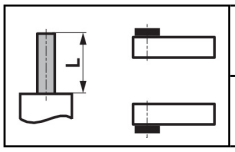	Min. 117
	Min. 20 mm [0.75"]

Clamping range

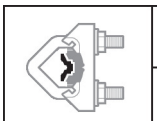	12...22	12...18
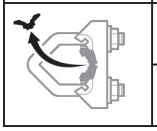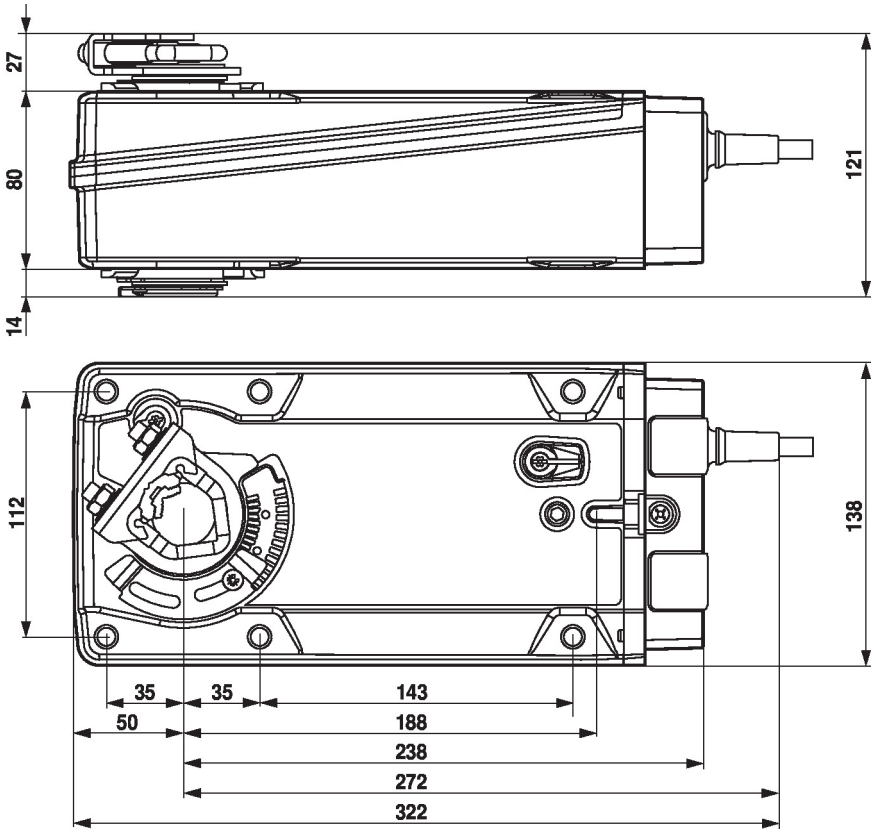	22...26.7	12...18