Communicative globe valve actuator for 2-way and 3-way globe valves

- Actuating force 2500 N
- Nominal voltage AC/DC 24 V
- Control modulating, communicative 2...10 V variable
- Stroke 40 mm
- Communication via Belimo MP-Bus
- Conversion of sensor signals

Picture may differ from product

Technical data

Electrical data	Nominal voltage	AC/DC 24 V
	Nominal voltage frequency	50/60 Hz
	Nominal voltage range	AC 19.2...28.8 V / DC 21.6...28.8 V
	Power consumption in operation	4 W
	Power consumption in rest position	1.5 W
	Power consumption for wire sizing	6 VA
	Connection supply / control	Terminals with cable 1 m, 4x 0.75 mm², Terminal 4 mm²
	Parallel operation	Yes (note the performance data)
Data bus communication	Communicative control	MP-Bus
	Number of nodes	MP-Bus max. 8
Functional data	Actuating force motor	2500 N
	Operating range Y	2...10 V
	Input impedance	100 kΩ
	Operating range Y variable	Start point 0.5...30 V End point 2.5...32 V
	Operating modes optional	Open/close 3-point (AC only) Modulating (DC 0...32 V)
	Position feedback U	2...10 V
	Position feedback U note	Max. 0.5 mA
	Position feedback U variable	Start point 0.5...8 V End point 2.5...10 V
	Position accuracy	±5%
	Manual override	with push-button, can be locked
	Stroke	40 mm
	Running time motor	150 s / 40 mm
	Running time motor variable	90...150 s
	Sound power level, motor	56 dB(A)
	Adaptation setting range	manual (automatic on first power-up)
	Adaptation setting range variable	No action Adaptation when switched on Adaptation after pushing the manual override button
	Override control	MAX (maximum position) = 100% MIN (minimum position) = 0% ZS (intermediate position, AC only) = 50%
	Override control variable	MAX = (MIN + 33%)...100% ZS = MIN...MAX
	Position indication	Mechanical, 5...40 mm stroke

Technical data

Safety data	Protection class IEC/EN	III, Safety Extra-Low Voltage (SELV)
	Power source UL	Class 2 Supply
	Degree of protection IEC/EN	IP54
	Degree of protection NEMA/UL	NEMA 2
	Housing	UL Enclosure Type 2
	EMC	CE according to 2014/30/EU
	Certification IEC/EN	IEC/EN 60730-1 and IEC/EN 60730-2-14
	UL Approval	cULus according to UL60730-1A, UL60730-2-14 and CAN/CSA E60730-1 The UL marking on the actuator depends on the production site, the device is UL-compliant in any case
	Type of action	Type 1
	Rated impulse voltage supply / control	0.8 kV
	Pollution degree	3
	Ambient humidity	Max. 95% RH, non-condensing
	Ambient temperature	0...50°C [32...122°F]
	Storage temperature	-40...80°C [-40...176°F]
	Servicing	maintenance-free
Weight	Weight	3.6 kg

Safety notes

- This device has been designed for use in stationary heating, ventilation and air-conditioning systems and must not be used outside the specified field of application, especially in aircraft or in any other airborne means of transport.
- Outdoor application: Only possible if no (sea) water, snow, ice, sunlight or aggressive gases act directly on the device and if it is ensured that the ambient conditions remain within the limit values specified in the data sheet at all times.
- Only authorised specialists may carry out installation. All applicable legal or institutional installation regulations must be complied with during installation.
- The switch for changing the direction of motion and so the closing point may be adjusted only by authorised specialists. The direction of motion is critical, particularly in connection with frost protection circuits.
- The device may only be opened at the manufacturer's site. It does not contain any parts that can be replaced or repaired by the user.
- The device contains electrical and electronic components and must not be disposed of as household refuse. All locally valid regulations and requirements must be observed.

Product features

Operating mode

Conventional operation:

The actuator is connected with an analogue control signal Y (note the operating range) and drives to the position defined. The measuring voltage U serves for the electrical display of the actuator position 0...100% and as control signal for other actuators.

Operation on Bus:

The actuator receives its digital control signal from the higher level controller via the MP-Bus and drives to the position defined. Connection U serves as communication interface and does not supply an analogue measuring voltage.

Converter for sensors

Connection option for a sensor (passive or active sensor or switching contact). The MP actuator serves as an analogue/digital converter for the transmission of the sensor signal via MP-Bus to the higher level system.

Configurable device

The factory settings cover the most common applications. Single parameters can be modified with Belimo Assistant 2.

Product features

Simple direct mounting
Simple direct mounting on the globe valve by means of form-fit hollow clamping jaws. The actuator can be rotated by 360° on the valve neck.

Manual override
Manual override with push-button possible (the gear train is disengaged for as long as the button is pressed or remains locked).
The stroke can be adjusted by using a hexagon socket screw key (5 mm), which is inserted into the top of the actuator. The stem extends when the key is rotated clockwise.

High functional reliability
The actuator is overload protected, requires no limit switches and automatically stops when the end stop is reached.

Position indication
The stroke is indicated mechanically on the bracket with tabs. The stroke range adjusts itself automatically during operation.

Home position
Factory setting: Actuator stem is retracted.
When valve-actuator combinations are shipped, the direction of motion is set in accordance with the closing point of the valve.
The first time the supply voltage is switched on, i.e. at the time of commissioning, the actuator carries out an adaptation, which is when the operating range and position feedback adjust themselves to the mechanical setting range.
The actuator then moves into the position defined by the control signal.

Adaptation and synchronisation
An adaptation can be triggered manually by pressing the "Adaptation" button or with Belimo Assistant 2. Both mechanical end stops are detected during the adaptation (entire setting range).
Automatic synchronisation after pressing the manual override button is configured. The synchronisation is in the home position (0%).
The actuator then moves into the position defined by the control signal.
A range of settings can be made using Belimo Assistant 2.

Setting direction of motion
When actuated, the direction-of-stroke switch changes the direction of motion in normal operation.

Accessories

Tools

Description	Type
Service tool for wired and wireless setup, on-site operation and troubleshooting.	Belimo Assistant 2
Belimo Assistant Link Bluetooth and USB to NFC and MP-Bus converter for configurable and communicative devices	LINK.10
Connecting cable 5 m, A: RJ11 6/4 LINK.10, B: 6-pin for connection to service socket	ZK1-GEN
Connecting cable 5 m, A: RJ11 6/4 LINK.10, B: free wire end for connection to MP/PP terminal	ZK2-GEN

Electrical accessories

Description	Type
Auxiliary switch 2x SPDT add-on	S2A-H
MP-Bus power supply for MP actuators	ZN230-24MP

Gateways

Description	Type
Gateway MP to BACnet MS/TP	UK24BAC
Gateway MP to Modbus RTU	UK24MOD

Electrical installation

Supply from isolating transformer.
Parallel connection of other actuators possible. Observe the performance data.
Direction of stroke switch factory setting: Actuator stem retracted (▲).

Electrical installation

Wire colours:
1 = black
2 = red
3 = white
5 = orange

MP-Bus

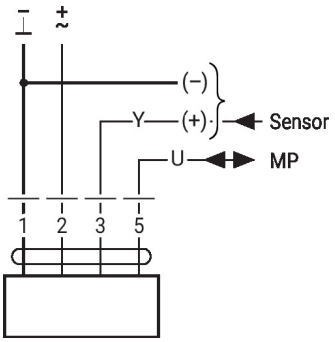

AC/DC 24 V, modulating

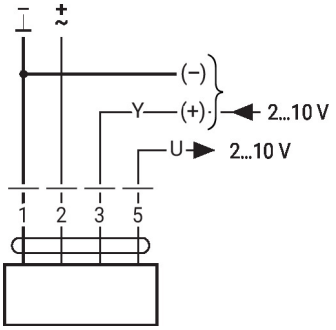

Further electrical installations

Functions with basic values (conventional mode)

Override control with AC 24 V with relay contacts

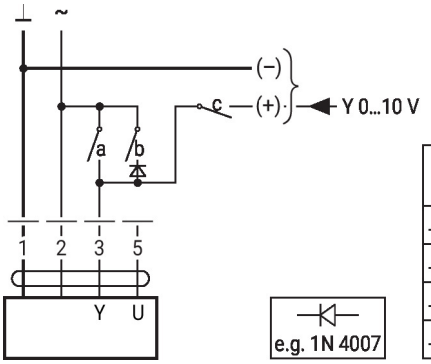

1	2	a	b	c	
					0 %
					ZS 50%
					100%
					Y

Override control with AC 24 V with rotary switch

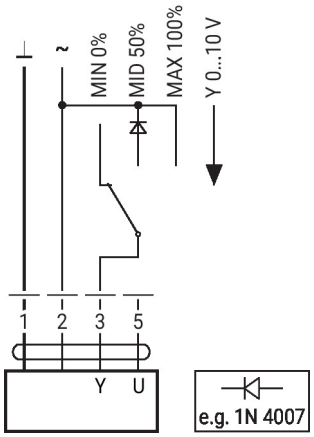

Control remotely 0...100% with positioner SG..

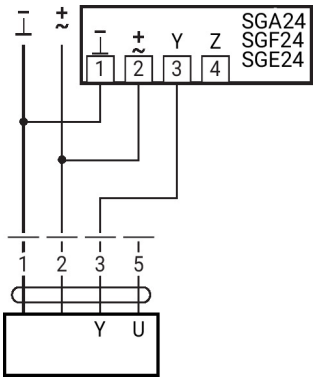

Minimum limit with positioner SG..

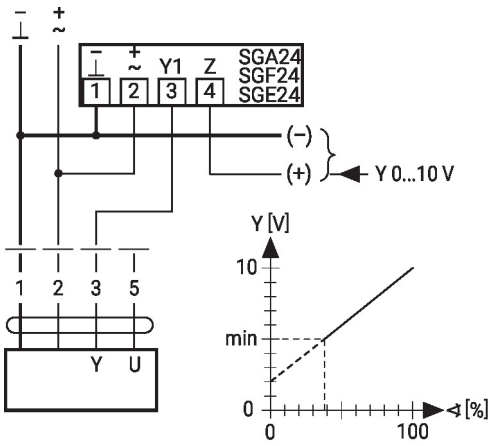

Further electrical installations

Functions with basic values (conventional mode)

Primary/secondary operation (position-dependent)

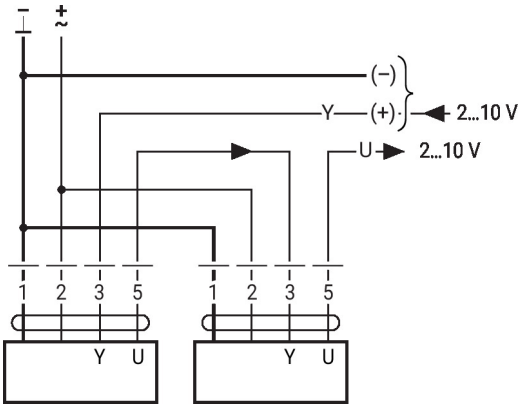

Control with 4...20 mA via external resistor

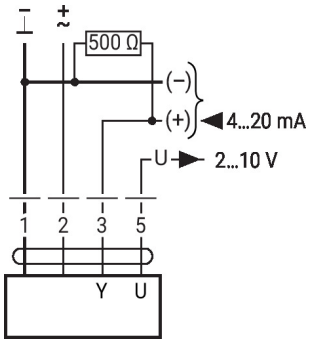

Caution:
The operating range must be set to DC 2...10 V.
The 500 Ohm resistor converts the 4...20 mA current signal to a voltage signal DC 2...10 V.

Functional check

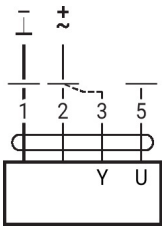

Procedure
1. Connect 24 V to connections 1 and 2
2. Disconnect connection 3:
– with direction of rotation L: Actuator rotates to the left
– with direction of rotation R: Actuator rotates to the right
3. Short-circuit connections 2 and 3:
– Actuator runs in opposite direction

MP-Bus

MP-Bus Network topology

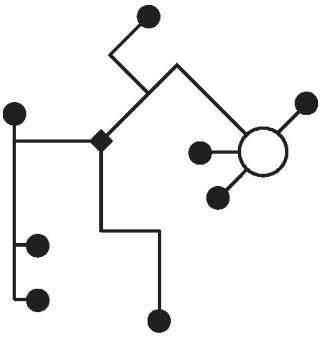

There are no restrictions for the network topology (star, ring, tree or mixed forms are permitted).
Supply and communication in one and the same 3-wire cable
• no shielding or twisting necessary
• no terminating resistors required

Connection on the MP-Bus

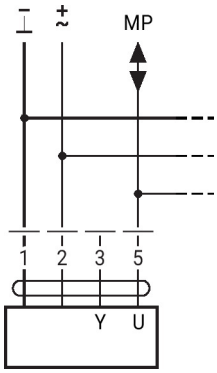

Max. 8 MP-Bus nodes

Further electrical installations

MP-Bus

Connection of active sensors

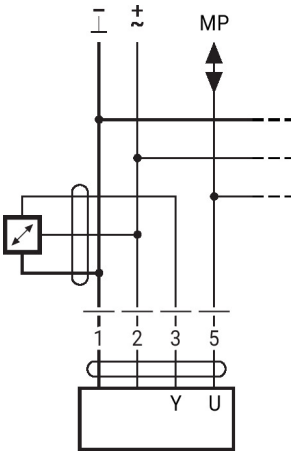

- Supply AC/DC 24 V
- Output signal 0...10 V (max. 0...32 V)
- Resolution 30 mV

Connection of external switching contact

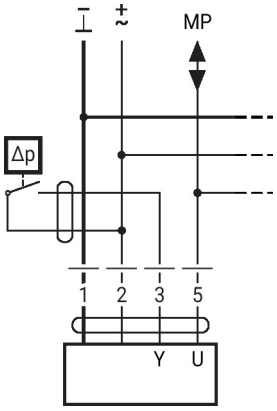

- Switching current 16 mA @ 24 V
- Start point of the operating range must be configured on the MP actuator as ≥0.5 V

Connection of passive sensors

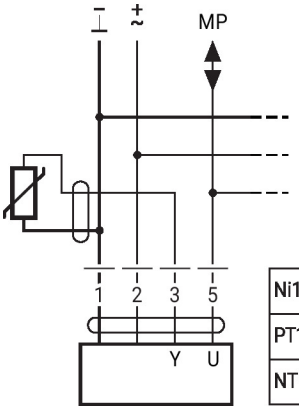

Ni1000	−28...+98°C	850...1600 Ω [2]
PT1000	−35...+155°C	850...1600 Ω [2]
NTC	−10...+160°C [1]	200 Ω...60 kΩ [2]

1) Depending on the type
2) Resolution 1 Ohm
Compensation of the measured value is recommended

Functions with specific parameters (configuration necessary)

Override control and limiting with AC 24 V with relay contacts

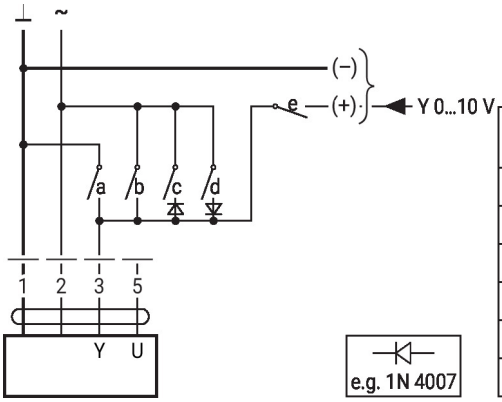

1	2	a	b	c	d	e	
L	L	L	–	–	–	–	Close
L	L	–	–	–	–	–	MIN
L	L	–	–	L	–	–	ZS
L	L	–	L	–	–	–	MAX
L	L	–	–	–	L	–	Open
L	–	–	–	–	–	L	Y

Control open/close

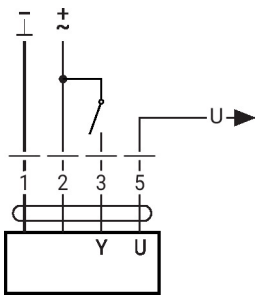

Further electrical installations

Functions with specific parameters (configuration necessary)

Control 3-point with AC 24 V

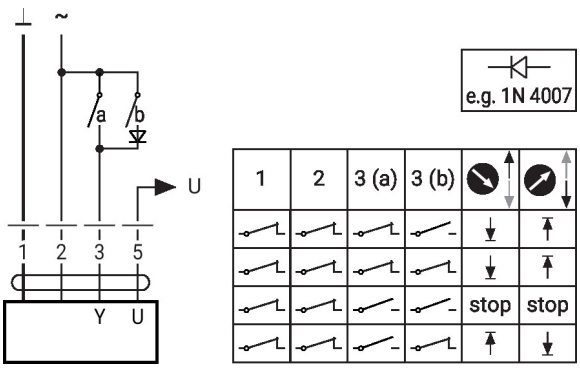

Override control and limiting with AC 24 V with rotary switch

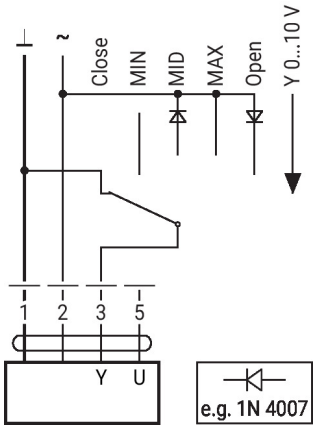

Caution:
The "Close" function is only guaranteed if the start point of the operating range is defined as min. 0.5 V.

Operating controls and indicators

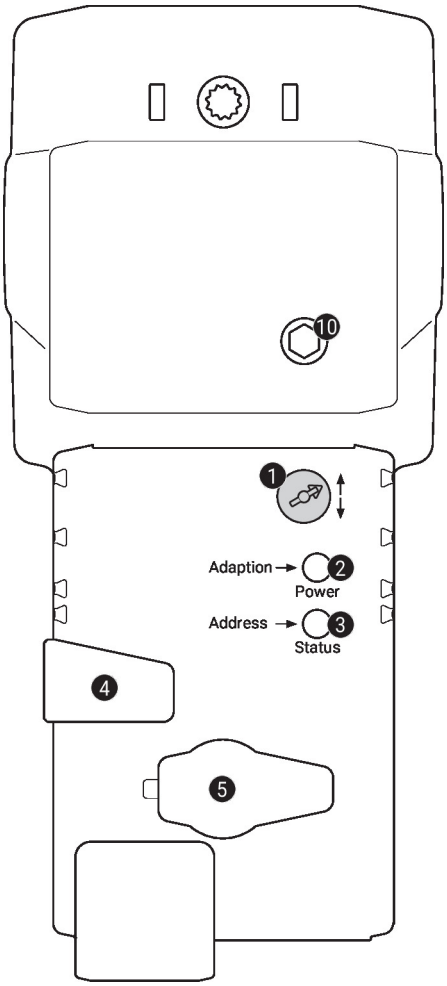

1 Direction-of-stroke switch

Switch over:	Direction of stroke changes

2 Push-button and LED display green

Off:	No power supply or malfunction
On:	In operation
Press button:	Triggers stroke adaptation, followed by standard mode

3 Push-button and LED display yellow

Off:	Standard mode
On:	Adaptation or synchronisation process active
Flickering:	MP-Bus communication active
Flashing:	Request for addressing from MP client
Press button:	Confirmation of the addressing

4 Manual override button

Press button:	Gear train disengages, motor stops, manual override possible
Release button:	Gear train engages, standard mode

5 Service plug
For connecting configuration and service tools

10 Manual override

Clockwise:	Actuator stem extends
Counterclockwise:	Actuator stem retracts

Service

Using Belimo Assistant 2, device parameters can be modified. Belimo Assistant 2 can operate on a smartphone, tablet or PC. The available connection options vary depending on the hardware on which Belimo Assistant 2 is installed.

For more information about Belimo Assistant 2, refer to the Quick Guide – Belimo Assistant 2.

Wired connection

Belimo devices can be accessed by connecting Belimo Assistant Link to the USB port on a PC or laptop and to the Service Socket or MP-Bus wire on the device.

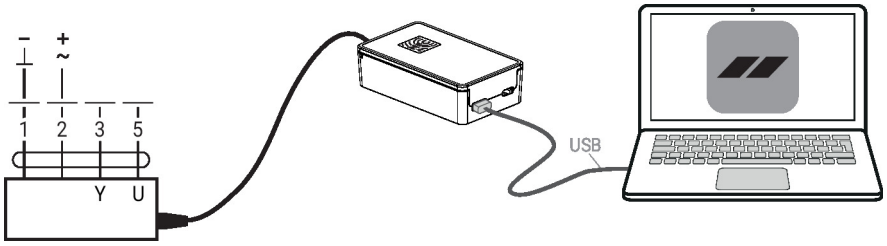

Dimensions

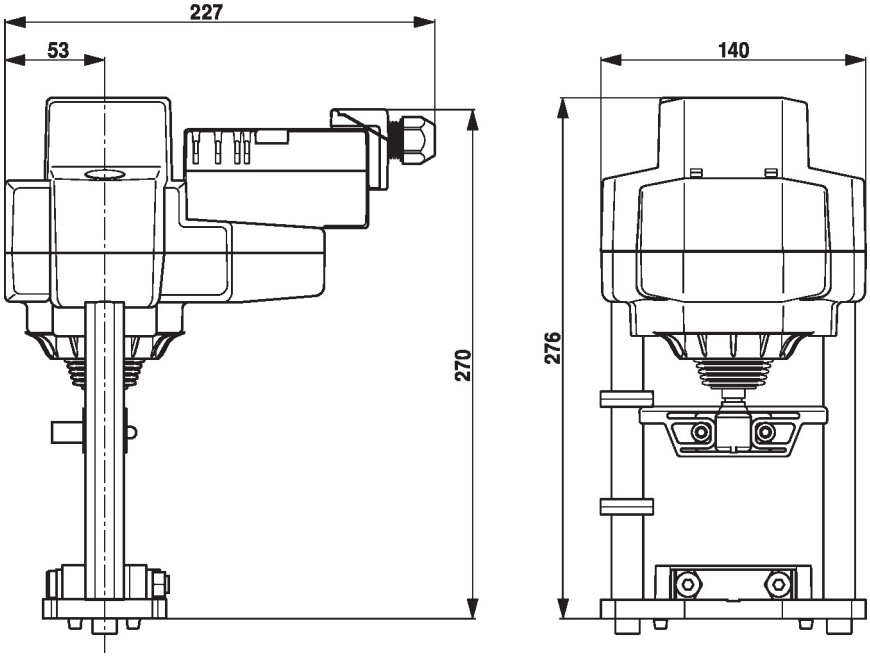

Further documentation

- The complete product range for water applications
- Installation instructions for actuators and/or globe valves
- Data sheets for globe valves
- Notes for project planning 2-way and 3-way globe valves
- General notes for project planning
- Tool connections
- Introduction to MP-Bus Technology
- Overview MP Cooperation Partners
- Quick Guide – Belimo Assistant 2