Rotary actuator in connection with a mounting kit for the motorisation of the most common mixing valves in HVAC systems

- Torque motor 5 Nm
- Nominal voltage AC 230 V
- Control 3-point
- Running time motor 35 s

Picture may differ from product

Technical data

Electrical data	Nominal voltage	AC 230 V
	Nominal voltage frequency	50/60 Hz
	Nominal voltage range	AC 198...264 V
	Power consumption in operation	3.5 W
	Power consumption for wire sizing	3.5 VA
	Connection supply / control	Cable 1 m, 3x 0.75 mm^2
	Parallel operation	No
Functional data	Torque motor	5 Nm
	Direction of motion motor	clockwise rotation (cw)
	Manual override	temporary and permanent gear train disengagement with rotary knob on the housing
	Angle of rotation	90°
	Running time motor	35 s / 90°
	Sound power level, motor	45 dB(A)
	Duty cycle value	75% (= active time 35 s / operating time 47 s)
	Position indication	Reversible scale plate
Safety data	Protection class IEC/EN	II, reinforced insulation
	Degree of protection IEC/EN	IP40
	EMC	CE according to 2014/30/EU
	Low voltage directive	CE according to 2014/35/EU
	Type of action	Type 1
	Rated impulse voltage supply / control	4 kV
	Pollution degree	3
	Ambient humidity	Max. 95% RH, non-condensing
	Ambient temperature	0...50°C [32...122°F]
	Storage temperature	-30...80°C [-22...176°F]
	Servicing	maintenance-free
Weight	Weight	0.41 kg
Housing colours	Housing cover	orange
	Housing base	black

Safety notes

- This device has been designed for use in stationary heating, ventilation and air-conditioning systems and must not be used outside the specified field of application, especially in aircraft or in any other airborne means of transport.
- The actuator is to be protected against moisture. It is not suitable for outdoor applications.
- To calculate the torque required, the specifications supplied by the mixing valve manufacturer must be observed.
- Only authorised specialists may carry out installation. All applicable legal or institutional installation regulations must be complied with during installation.
- The installer must check for correct principle of operation after installation.
- The device does not contain any parts that can be replaced or repaired by the user.
- The device contains electrical and electronic components and must not be disposed of as household refuse. All locally valid regulations and requirements must be observed.
- Caution: Mains voltage!

Product features

Operating mode
The actuator is activated with a 3-point signal.

Simple direct mounting
Simple direct mounting with only one screw. The stud bolt included in delivery serves as an anti-rotation mechanism. The mounting orientation can be freely selected in steps of 90°.

Manual override
Manual override with lever possible. Temporary gear train disengagement by pushing the rotary knob. Permanent disengagement by pushing and simultaneous rotating the rotary knob clockwise 90°.

High functional reliability
The actuator switches off automatically when the end stops are reached.

Accessories

Electrical accessories

Description	Type
Auxiliary switch 1x SPDT for 3-point HT actuators with cable connection	SNR

Mechanical accessories

Description	Type
Mounting kit for LK mixing valve	MS-NRA
Mounting kit for Barberi mixing valves	MS-NRB
Mounting kit for Honeywell/Centra DR..MA mixing valves	MS-NRC
Mounting kit for Honeywell/Centra DRU.. mixing valves	MS-NRC1
Mounting kit for mixing valves with 12 mm round shaft	MS-NRE
Mounting kit for ESBE mixing valves VRG/VRB/VRH	MS-NRE6
Mounting kit for Hora mixing valves	MS-NRH
Mounting kit for Siemens/Landis&Stäfa mixing valves VCI/VBG/VBF	MS-NRL
Mounting kit for Lazzari mixing valves	MS-NRLA
Mounting kit for Lovato mixing valves	MS-NRLO
Mounting kit for Satchwell MB mixing valves	MS-NRS
Mounting kit for Satchwell MBF mixing valves	MS-NRSF

Electrical installation

Caution: Mains voltage!

Wire colours:
1 = blue
2 = brown
3 = white

Electrical installation

AC 230 V, 3-point

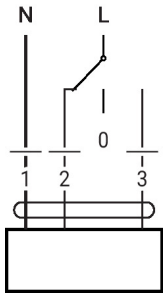

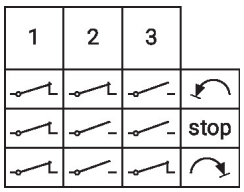
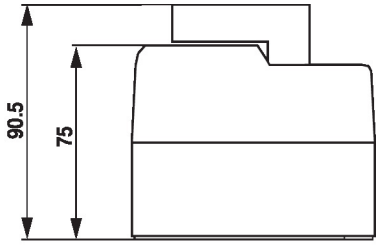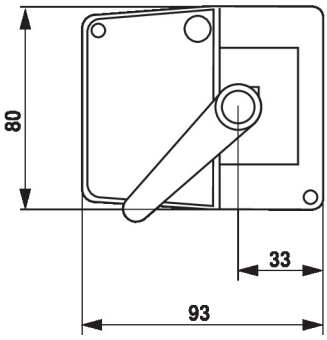
Dimensions