Ball joint

- suitable for damper crank arm KH8 / KH10

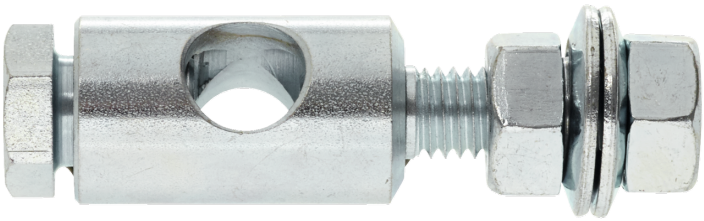

Picture may differ from product

Technical data

Weight	Weight	0.057 kg
Materials	Used materials	Galvanised steel

Safety notes

- This accessory has been designed for use in stationary heating, ventilation and air-conditioning systems and must not be used outside the specified field of application, especially in aircraft or in any other airborne means of transport.
- Only authorised specialists may carry out installation. All applicable legal or institutional installation regulations must be complied with during installation.
- The accessory may not be disposed of as household refuse. All locally valid regulations and requirements must be observed.

Product features

Application Suitable for LF.., GK..A, GM..A, LMQ..A, NF..A, NKQ..A, NM..A, NMC..A, NMQ..A, SF..A, SM..A, SMC..A, SMD..A, SMQ..A, TF..

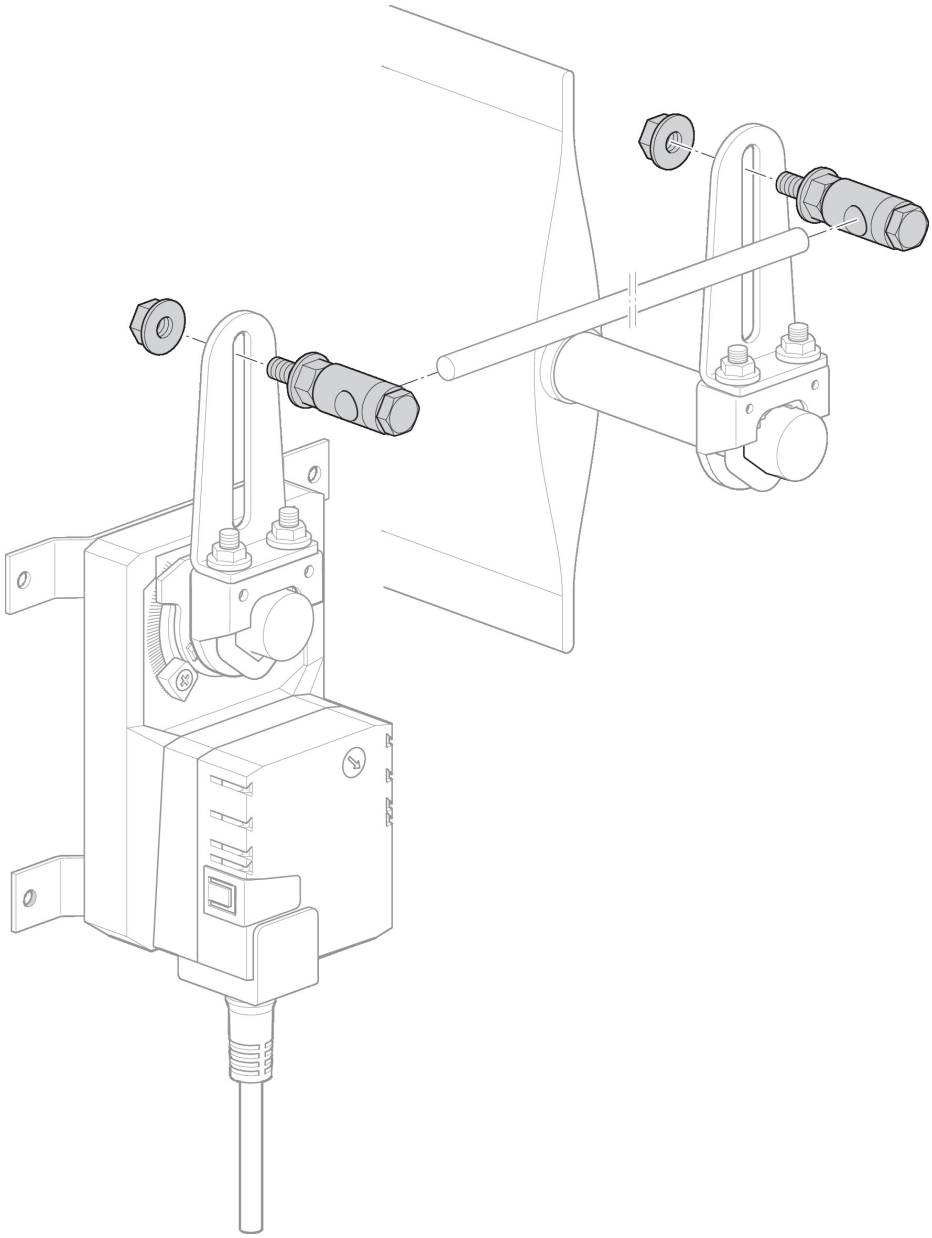

Dimensions

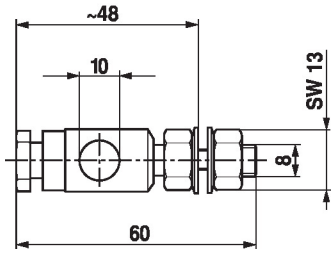

Type	Weight
KG10A	0.057 kg