RobustLine rotary actuator fail-safe and extended functionalities for adjusting dampers in technical building installations

- Air damper size up to approx. 1.2 m²
- Torque motor 6 Nm
- Nominal voltage AC/DC 24 V
- Control Open/close
- Running time motor 4 s
- Optimum protection against corrosion and chemical influences, UV radiation, damp and condensation

Picture may differ from product

Technical data

Electrical data	Nominal voltage	AC/DC 24 V
	Nominal voltage frequency	50/60 Hz
	Nominal voltage range	AC 19.2...28.8 V / DC 21.6...28.8 V
	Power consumption in operation	11 W
	Power consumption in rest position	3 W
	Power consumption for wire sizing	22 VA
	Connection supply / control	Cable 1 m, 3x 0.75 mm² (halogen-free)
	Parallel operation	Yes (note the performance data)
Functional data	Torque motor	6 Nm
	Setting fail-safe position	0...100%, adjustable in increments of 10% (POP rotary knob on 0 corresponds to left end stop)
	Bridging time (PF)	0 s
	Direction of motion motor	selectable with switch 0 (ccw rotation) / 1 (cw rotation)
	Direction of motion fail-safe	selectable with switch 0...100%
	Manual override	with push-button, can be locked
	Angle of rotation	Max. 95°
	Angle of rotation note	can be limited on both sides with adjustable mechanical end stops
	Minimum angle of rotation	Min. 30°
	Running time motor	4 s / 90°
	Running time fail-safe	4 s / 90°
	Sound power level, motor	60 dB(A)
	Sound power level, fail-safe	60 dB(A)
	Mechanical interface	Universal shaft clamp 8...20 mm
	Position indication	Mechanical, pluggable
Safety data	Protection class IEC/EN	III, Safety Extra-Low Voltage (SELV)
	Power source UL	Class 2 Supply
	Degree of protection IEC/EN	IP66/67
	Degree of protection NEMA/UL	NEMA 4X
	Housing	UL Enclosure Type 4X
	EMC	CE according to 2014/30/EU
	Certification IEC/EN	IEC/EN 60730-1 and IEC/EN 60730-2-14
	Type of action	Type 1.AA

Technical data

Safety data	Rated impulse voltage supply / control	0.8 kV
	Pollution degree	4
	Ambient humidity	Max. 100% RH
	Ambient temperature	-30...50°C [-22...122°F]
	Storage temperature	-40...80°C [-40...176°F]
	Servicing	maintenance-free
Weight	Weight	1.9 kg
Terms	Abbreviations	POP = Power off position / fail-safe position PF = Power fail delay time / bridging time

Safety notes

- This device has been designed for use in stationary heating, ventilation and air-conditioning systems and must not be used outside the specified field of application, especially in aircraft or in any other airborne means of transport.
- Only authorised specialists may carry out installation. All applicable legal or institutional installation regulations must be complied with during installation.
- Junction boxes must at least correspond with housing IP degree of protection!
- The cover of the protective housing may be opened for adjustment and servicing. When it is closed afterwards, the housing must seal tight (see installation instructions).
- The device may only be opened at the manufacturer's site. It does not contain any parts that can be replaced or repaired by the user.
- The cables must not be removed from the device installed in the interior.
- To calculate the torque required, the specifications supplied by the damper manufacturers concerning the cross-section and the design, as well as the installation situation and the ventilation conditions must be observed.
- The device contains electrical and electronic components and must not be disposed of as household refuse. All locally valid regulations and requirements must be observed.
- The information on chemical resistance refers to laboratory tests with raw materials and finished products and to trials in the field in the areas of application indicated.
- The materials used may be subjected to external influences (temperature, pressure, constructional fixture, effect of chemical substances, etc.), which cannot be simulated in laboratory tests or field trials.
- Self adaptation is necessary when the system is commissioned and after each adjustment of the angle of rotation (press the adaptation push-button once).
- The information regarding areas of application and resistance can therefore only serve as a guideline. In case of doubt, we definitely recommend that you carry out a test. This information does not imply any legal entitlement. Belimo will not be held liable and will provide no warranty. The chemical or mechanical resistance of the materials used is not alone sufficient for judging the suitability of a product. Regulations pertaining to combustible liquids such as solvents etc. must be taken into account with special reference to explosion protection.
- Flexible metallic cable conduits or threaded cable conduits of equal value are to be used for UL (NEMA) Type 4X applications.
- When used under high UV loads, e.g. extreme sunlight, the use of flexible metallic or equivalent cable conduits is recommended.

Product features

Fields of application

The actuator is particularly suitable for utilisation in outdoor applications and is protected against the following weather conditions:
- Wood drying
- Animal breeding
- Food processing
- Agriculture
- Indoor swimming pools / bathhouses
- Rooftop ventilation plant rooms
- General outdoor applications
- Alternating climate
- Laboratories

Resistances

Noxious gas test EN 60068-2-60 (Fraunhofer Institut ICT / DE)
Salt fog spray test EN 60068-2-52 (Fraunhofer Institut ICT / DE)
Ammoniac test DIN 50916-2 (Fraunhofer Institut ICT / DE)
Climate test IEC60068-2-30 (Trikon Solutions AG / CH)
Disinfectant (animals) (Trikon Solutions AG / CH)
UV Test (Solar radiation at ground level) EN 60068-2-5, EN 60068-2-63 (Quinel / Zug CH)

Used materials

Actuator housing polypropylene (PP)
Cable glands / hollow shaft polyamide (PA)
Connecting cable FRNC
Clamp / screws in general Steel 1.4404
Seals EPDM
Form fit insert aluminium anodised

Operating mode

The actuator moves the damper to the desired operating position at the same time as the integrated capacitors are charged. Interrupting the supply voltage causes the damper to be rotated back into the fail-safe position by means of stored electrical energy.

Pre-charging time (start up)

The capacitor actuators require a pre-charging time. This time is used for charging the capacitors up to a usable voltage level. This ensures that, in the event of a power failure, the actuator can move at any time from its current position into the preset fail-safe position. The duration of the pre-charging time depends mainly on how long the power was interrupted.

Typical pre-charging times

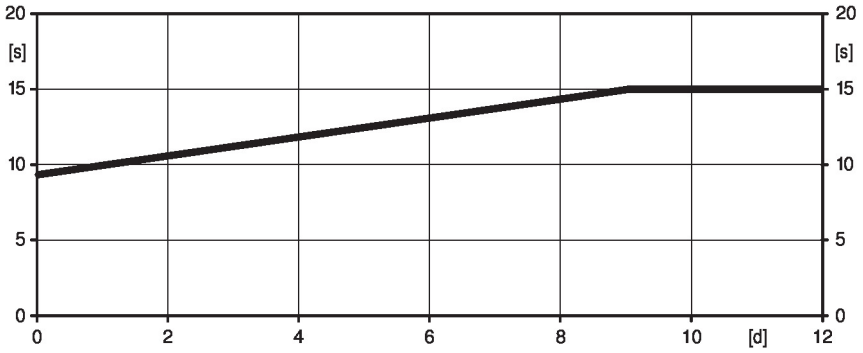

[d] = Power failure in days
[s] = Pre-charging time in seconds
PF[s] = Bridging time

	[d]				
	0	1	2	7	≥10
[s]	9	10	11	13	15

Delivery condition (capacitors)

The actuator is completely discharged after delivery from the factory, which is why the actuator requires approximately 15 s pre-charging time before initial commissioning in order to bring the capacitors up to the required voltage level.

Product features

Setting fail-safe position (POP)
The rotary knob fail-safe position can be used to adjust the desired fail-safe position 0...100% in 10% increments. The rotary knob always refers to the adapted angle of rotation range. In the event of a power failure, the actuator will move into the selected fail-safe position.

Simple direct mounting
Simple direct mounting on the damper shaft with a universal shaft clamp, supplied with an anti-rotation mechanism to prevent the actuator from rotating.

Manual override
Manual control with push-button possible - temporary. The gear train is disengaged and the actuator decoupled for as long as the button is pressed.

Adjustable angle of rotation
Adjustable angle of rotation with mechanical end stops. A minimum permissible angle of rotation of 30° must be allowed for.

High functional reliability
The actuator is overload protected, requires no limit switches and automatically stops when the end stop is reached.

Home position
The first time the supply voltage is switched on, i.e. at the time of commissioning, the actuator carries out an adaptation, which is when the operating range and position feedback adjust themselves to the mechanical setting range.

The detection of the mechanical end stops enables a gentle approach to the end positions, thus protecting the actuator mechanics.

The actuator then moves into the position defined by the control signal.

Setting direction of motion
When actuated, the direction of the rotation switch changes the running direction in normal operation. The direction of the rotation switch has no influence on the fail-safe position which has been set.

Electrical installation

Supply from isolating transformer.
Parallel connection of other actuators possible. Observe the performance data.

Wire colours:
1 = black
2 = red
3 = white

AC/DC 24 V, open/close

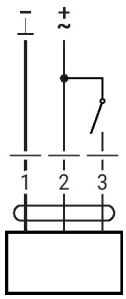

Operating controls and indicators

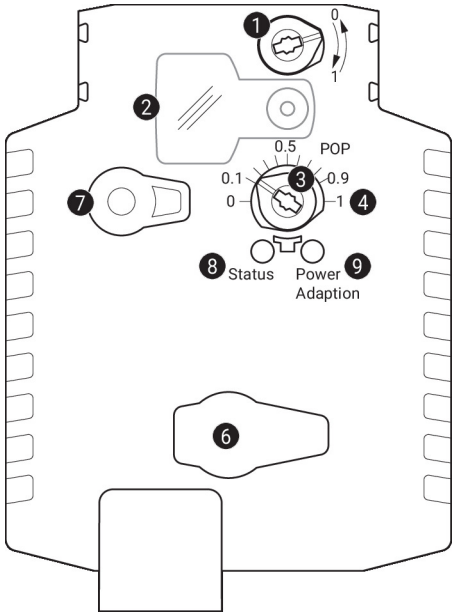

1 Direction of rotation switch

Switch over: Direction of rotation changes

2 Cover, POP button

3 POP button

4 Scale for manual adjustment

6 (no function)

7 Manual override button

Press button: Gear train disengages, motor stops, manual override possible

Release button: Gear train engages, standard mode

9 Push-button (LED green)

Press button: Triggers angle of rotation adaptation, followed by standard mode

LED displays

yellow 8	green 9	Meaning / function
Off	On	Operation OK
Off	Flashing	POP function active
On	Off	Fault
Off	Off	Not in operation
On	On	Adaptation process active

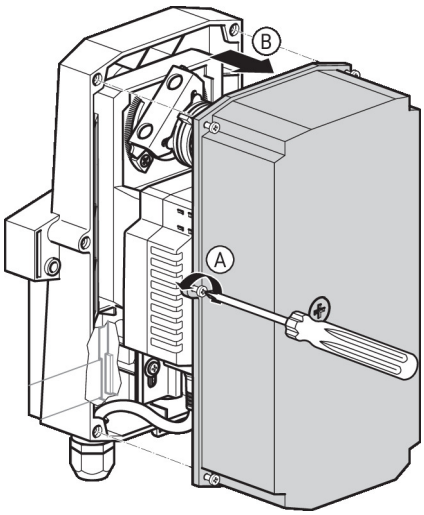

Operating controls and indicators

Setting fail-safe position (POP)

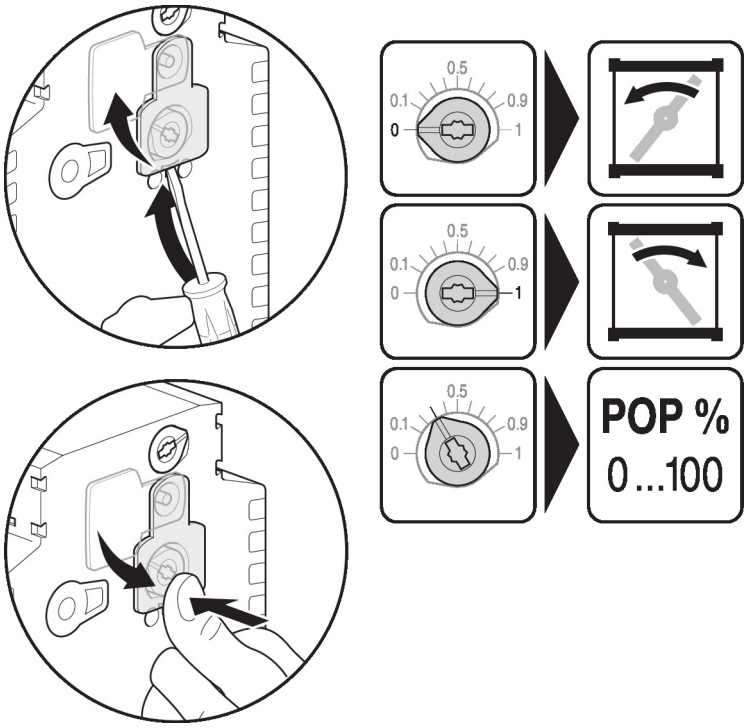

Dimensions

Spindle length

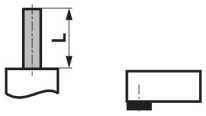	-
	20...58

Clamping range
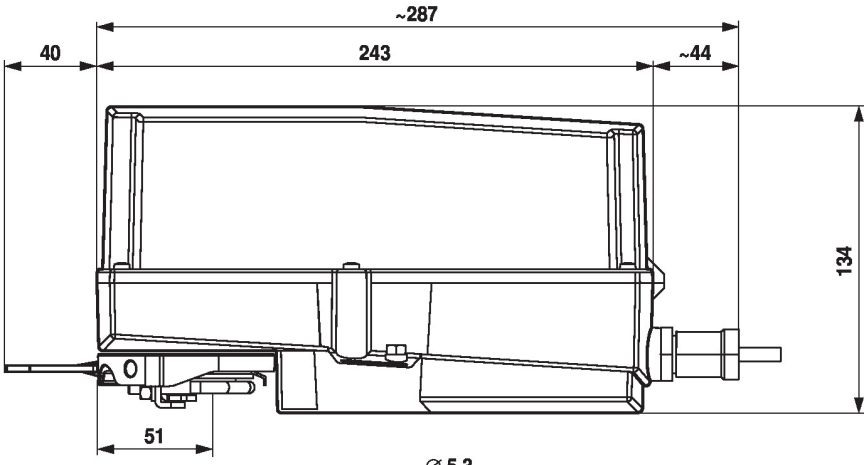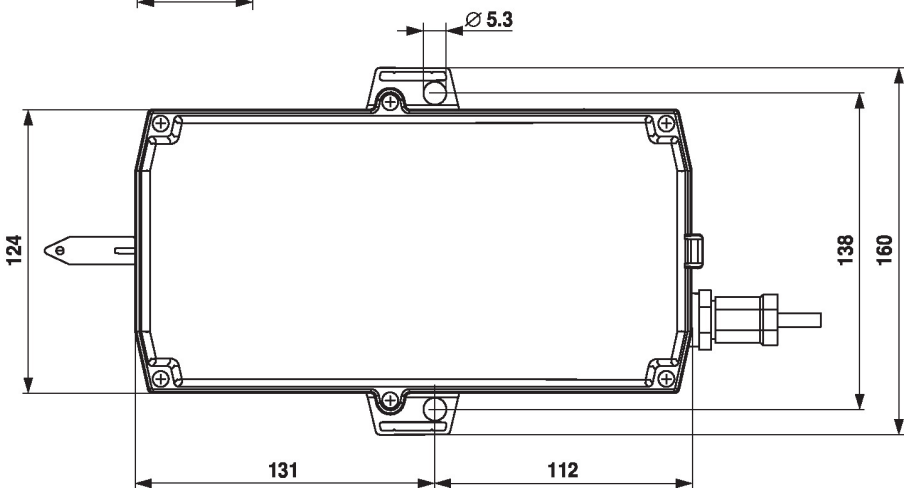
8...20	8...14	10...20