Room Operating Unit Temperature

For measuring the temperature in the room and setting room temperature setpoint. The room units can be seamlessly connected to existing third-party controllers.

## Type Overview

| Type | Output signal | Potentiometer |
|---|---|---|
| **P-01RT-1B-0** | Pt1000 | 0.7...1.3 kΩ |
| **P-01RT-1F-0** | NTC1k8 | 0.7...1.3 kΩ |
| **P-01RT-1L-0** | NTC10k (10k2) | 2.5...8.5 kΩ |
| **P-01RT-1M-0** | NTC10k Pre (10k3) | 2.5...8.5 kΩ |

## Technical data

| | | |
|---|---|---|
| **Electrical data** | Electrical connection | Spring loaded terminal 0.5...1.5 mm² |
| | Cable entry | Wire openings at the backside (for In-wall wiring) and top-/bottom side (for On-wall wiring) |
| **Functional data** | Medium | Air |
| **Measuring data** | Measured values | Temperature |
| | Accuracy potentiometer | typical ±15% |
| **Specification temperature passive** | Measuring range | 0...50°C [32...122°F] |
| | Measuring current | Pt1000: <0.3 mA @ 0°C [32°F]<br>NTC1k8: <0.1 mA @ 25°C [77°F]<br>NTC10k (10k2): <2 mA @ 25°C [77°F]<br>NTC10k Pre (10k3): <2.7 mA @ 25°C [77°F] |
| | Accuracy temperature | Passive sensors depending on used type<br>Pt.. : Class B, ±0.3°C @ 0°C [±0.5°F @ 32°F]<br>NTC1k8 : ±0.5°C @ 25°C [±0.9°F @ 77°F]<br>NTC.. : ±0.2°C @ 25°C [±0.35°F @ 77°F] |
| | Time constant τ (63%) in the room | Typical 360 s |
| | Wall coupling factor | 35 % |
| **Safety data** | Protection class IEC/EN | III, Protective Extra-Low Voltage (PELV) |
| | Degree of protection IEC/EN | IP30 |
| | EU Conformity | CE Marking |
| | Certification IEC/EN | IEC/EN 60730-1 and IEC/EN 60730-2-9 |
| | Quality Standard | ISO 9001 |
| | Ambient humidity | Max. 95% RH, non-condensing |
| | Ambient temperature | 0...50°C [32...122°F] |
| | Storage temperature | -20...60°C [-4...140°F] |
| **Materials** | Housing | PC, white, RAL 9003 |

## Safety notes

This device has been designed for use in stationary heating, ventilation and air-conditioning systems and must not be used outside the specified field of application. Unauthorised modifications are prohibited. The product must not be used in relation with any equipment that in case of a failure may threaten humans, animals or assets.

Ensure all power is disconnected before installing. Do not connect to live/operating equipment.

Only authorised specialists may carry out installation. All applicable legal or institutional installation regulations must be complied with during installation.

The device contains electrical and electronic components and must not be disposed of as household refuse. All locally valid regulations and requirements must be observed.

## Remarks

**General remarks concerning sensors**

Due to self-heating with 2 wire passive sensors, the supply wire current affects the measurement accuracy. So the supply current should not be higher than the measuring current values specified in this data sheet.

When using lengthy connecting cables (depending on the cross section used), the cable resistance must be taken into account. The lower the impedance of the sensor used, the greater the effect of the line resistance on the measurement, because it generates an offset.

## Parts included

Screws

## Wiring diagram

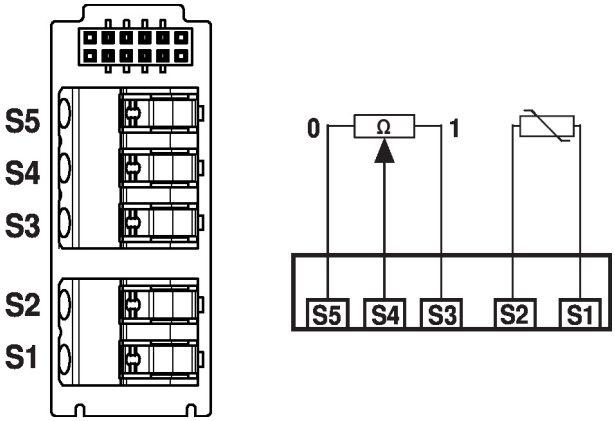

## Dimensions

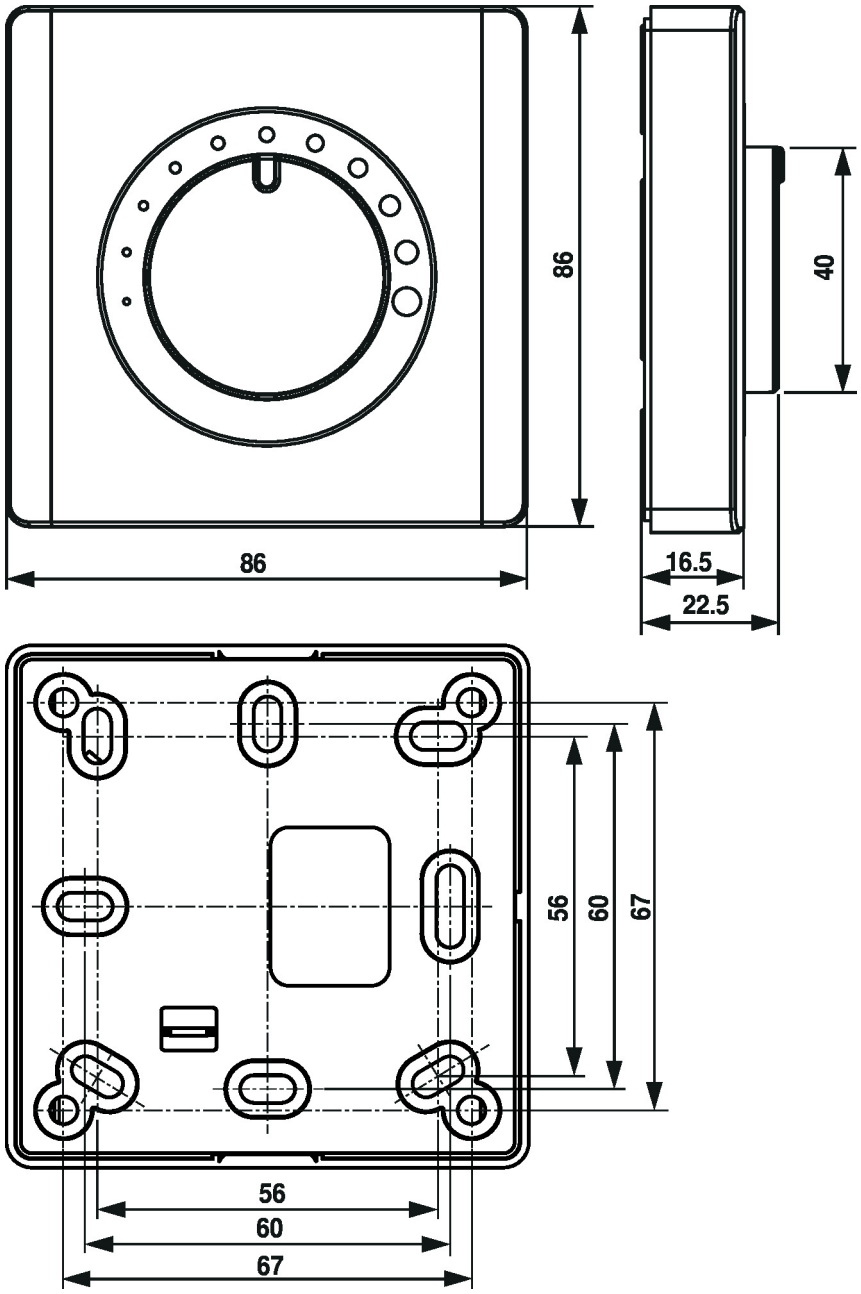


| Type | Weight |
|---|---|
| P-01RT-1B-0 | 0.064 kg |
| P-01RT-1F-0 | 0.064 kg |
| P-01RT-1L-0 | 0.064 kg |
| P-01RT-1M-0 | 0.064 kg |

## Further documentation

- Installation instructions
- Resistance characteristics