Feedback potentiometer for damper actuators and rotary actuators

- Nominal resistance 1 kΩ

Picture may differ from product

Technical data

Electrical data	Nominal resistance	1 kΩ
	Tolerance	±5%
	Loading capacity	Max. 1 W
	Linearity	±2%
	Resolution	Min. 1%
	Residual resistance	Max. 5% on both sides
	Connection potentiometer	Cable 1 m, 3 x 0.75 mm^2 halogen-free
	Electrical connection	Cable
Safety data	Protection class IEC/EN	III, Safety Extra-Low Voltage (SELV)
	Power source UL	Class 2 Supply
	Degree of protection IEC/EN	IP54
	EMC	CE according to 2014/30/EU
	Certification IEC/EN	IEC/EN 60730-1 and IEC/EN 60730-2-14
	UL Approval	cULus according to UL60730-1A, UL60730-2-14 and CAN/CSA E60730-1
	Type of action	Type 1
	Rated impulse voltage supply	0.8 kV
	Pollution degree	3
	Ambient humidity	Max. 95% RH, non-condensing
	Ambient temperature	-30...50°C [-22...122°F]
	Storage temperature	-40...80°C [-40...176°F]
	Servicing	maintenance-free
Weight	Weight	0.18 kg

Safety notes

- The device must not be used outside the specified field of application, especially not in aircraft or in any other airborne means of transport.
- Outdoor application: only possible in case that no (sea) water, snow, ice, insolation or aggressive gases interfere directly with the device and that it is ensured that the ambient conditions remain within the thresholds according to the data sheet at any time.
- Only authorised specialists may carry out installation. All applicable legal or institutional installation regulations must be complied with during installation.
- The device may only be opened at the manufacturer's site. It does not contain any parts that can be replaced or repaired by the user.
- Cables must not be removed from the device.
- The device contains electrical and electronic components and must not be disposed of as household refuse. All locally valid regulations and requirements must be observed.

Product features

Operating mode
A carrier plate uses adaptation to make a positive fit on the shaft clamp (damper actuators) or on the position indication (rotary actuators) and transfers the position directly to the feedback potentiometer.

Application
The feedback potentiometer unit is used for modulating damper control in connection with controllers with fixed feedback. The feedback potentiometers can also be used in conjunction with commercially available systems for damper position indication or as positioners for parallel running actuators.

Simple direct mounting
The feedback potentiometers are attached directly by the shaft clamp (damper actuators) or on the position indication (rotary actuators). The guiding grooves between the housing and the switch ensure a tightly sealing fit.

Accessories

Mechanical accessories

Description	Type
Adapter for auxiliary switch and feedback potentiometer, Multipack 20 pcs.	Z-SPA

Electrical installation

Wire colours:
S1 = violet
S2 = red
S3 = white

Wiring diagrams

Potentiometer

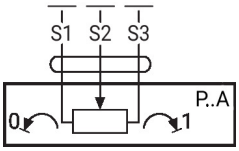

Recommendation: wiring as a voltage divider

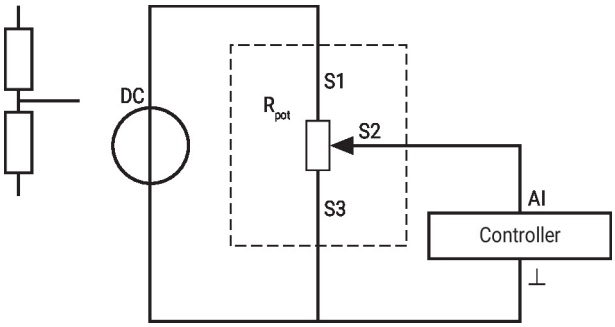

If the potentiometer is mainly operated in the same small angle range, we recommend wiring it as a voltage divider.

Dimensions

	A		A
TM..A.., LM..A..	66	LMQ..A..	80
NM..A..	69	NMQ..A..	83
SM..A..	71	SMQ..A..	89
SMD..A..	71	NKQ..A..	87
GM..A..	78	GK..A..	94

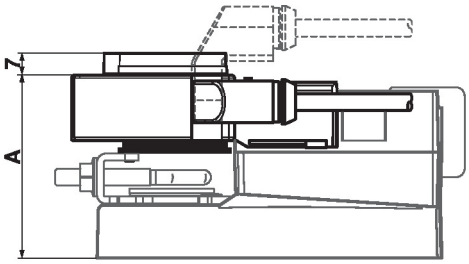

	A		A
TR..A.., LR..A..	66	LRQ..A..	80
NR..A..	69	NRQ..A..	83
SR..A..	71	GRK..A..	94
GR..A..	78		

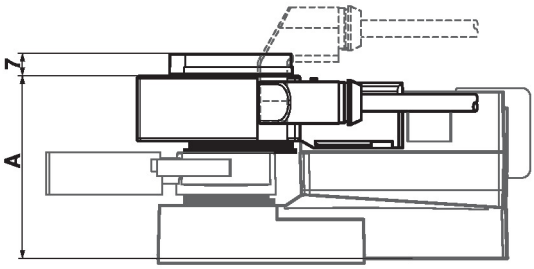

	A
DR..A..	78
DRK..A..	94

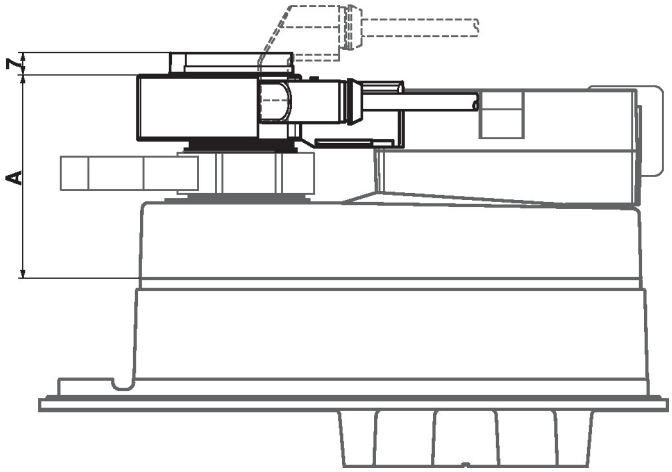

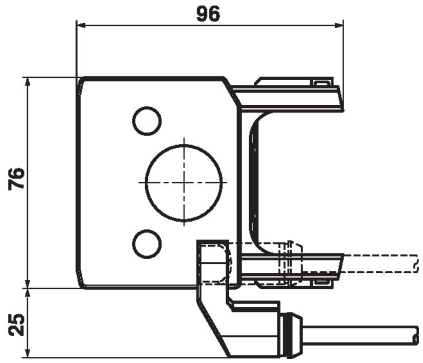

Type	Weight
P1000A	0.18 kg