Damper actuator in the IP66/67 protective housing for adjusting dampers in HVAC plants, comparable industrial plants and technical building installations

- Torque motor 160 Nm
- Nominal voltage AC 24...240 V / DC 24...125 V
- Control Open/close, 3-point
- With 2 integrated auxiliary switches

Picture may differ from product

Technical data

Electrical data	Nominal voltage	AC 24...240 V / DC 24...125 V
	Nominal voltage frequency	50/60 Hz
	Nominal voltage range	AC 19.2...264 V / DC 19.2...137.5 V
	Power consumption in operation	20 W
	Power consumption in rest position	6 W
	Power consumption for wire sizing	with 24 V 19 VA / with 240 V 49 VA
	Auxiliary switch	2x SPDT, 1x 10° / 1x 0...90°
	Switching capacity auxiliary switch	1 mA...3 A (0.5 A inductive), DC 5 V...AC 250 V
	Connection protective earth	earth terminal
	Connection supply / control	Terminals 2.5 mm^2
	Connection auxiliary switch	Terminals 2.5 mm^2
	Parallel operation	Yes (note the performance data)
Functional data	Torque motor	160 Nm
	Inhibiting torque static (voltage-free)	50 Nm
	Direction of motion motor	electronically reversible
	Manual override	hand lever
	Angle of rotation	Max. 95°
	Angle of rotation note	can be electronically limited on both sides with Belimo Assistant 2
	Running time motor	35 s / 90°
	Running time motor variable	30...120 s
	Sound power level, motor	68 dB(A)
	Mechanical interface	Form fit 17x17 mm
	Position indication	Scale plate 0...90
Safety data	Protection class IEC/EN	I, protective earth (PE)
	Protection class UL	I, protective earth (PE)
	Degree of protection IEC/EN	IP66/67
	Degree of protection NEMA/UL	NEMA 4X
	Housing	UL Enclosure Type 4X
	EMC	CE according to 2014/30/EU
	Low voltage directive	CE according to 2014/35/EU
	Certification IEC/EN	IEC/EN 60730-1 and IEC/EN 60730-2-14
	UL Approval	cULus according to UL60730-1A, UL60730-2-14 and CAN/CSA E60730-1 The UL marking on the actuator depends on the production site, the device is UL-compliant in any case
	Type of action	Type 1
	Rated impulse voltage auxiliary switch	2.5 kV

Technical data

Safety data	Pollution degree	3
	Ambient humidity	Max. 100% RH
	Ambient temperature	-30...50°C [-22...122°F]
	Storage temperature	-40...80°C [-40...176°F]
	Servicing	maintenance-free
Weight	Weight	6.0 kg

Safety notes

- This device has been designed for use in stationary heating, ventilation and air-conditioning systems and must not be used outside the specified field of application, especially in aircraft or in any other airborne means of transport.
- Only authorised specialists may carry out installation. All applicable legal or institutional installation regulations must be complied with during installation.
- Caution: Mains voltage!
- The device has a protective earthing. Incorrect connection of the protective earth can lead to hazards due to electrical shock.
- Apart from the wiring compartment, the device may only be opened at the manufacturer's site. It does not contain any parts that can be replaced or repaired by the user.
- The device contains electrical and electronic components and must not be disposed of as household refuse. All locally valid regulations and requirements must be observed.
- To calculate the torque required, the specifications supplied by the damper manufacturers concerning the cross-section and the design, as well as the installation situation and the ventilation conditions must be observed.
- The materials used may be subject to external influences (temperature, pressure, construction fastening, effect of chemical substances, etc.), which cannot be simulated in laboratory tests or field trials. In case of doubt, we definitely recommend that you carry out a test. This information does not imply any legal entitlement. Belimo will not be held liable and will provide no warranty.
- If cables which are not authorised for UL (NEMA) Type 4X applications are used, then flexible metallic cable conduits or suitable threaded cable conduits of equal value are to be used.
- The two switches integrated in the actuator are to be operated either on mains voltage or on safety extra-low voltage. The combination mains voltage/safety extra-low voltage is not permitted.

Product features

Fields of application

The actuator is particularly suitable for utilisation in outdoor applications and is protected against the following weather conditions:
- UV radiation
- Dirt / Dust
- Rain / Snow
- Air humidity

Operating mode

The actuator is equipped with a universal power supply module that can utilise supply voltages of AC 24...240 V and DC 24...125V.

Internal heating

An internal heater prevents condensation buildup.

Thanks to the integrated temperature and humidity sensor, the built-in heater automatically switches on/off.

Configurable device

The factory settings cover the most common applications.

Belimo Assistant 2 is required for configuration via Near Field Communication (NFC) and simplifies commissioning. Moreover, Belimo Assistant 2 provides a variety of diagnostic options.

The ZTH EU service tool provides a selection of both diagnostic and setting options.

Simple direct mounting

Simple direct mounting on the damper shaft with form fit insert.

Product features

Manual override
The damper can be manually operated using a hand crank. Unlocking is carried out manually by removing the hand crank.

High functional reliability
The actuator is overload protected, requires no limit switches and automatically stops when the end stop is reached.

Flexible signalling
The actuator has one auxiliary switch with a fixed setting (10°) and one adjustable auxiliary switch (0...90°).

Accessories

Tools

Description	Type
Service tool for wired and wireless setup, on-site operation and troubleshooting.	Belimo Assistant 2
Belimo Assistant Link Bluetooth and USB to NFC and MP-Bus converter for configurable and communicative devices	LINK.10
Connecting cable 5 m, A: RJ11 6/4 LINK.10, B: 6-pin for connection to service socket	ZK1-GEN
Connecting cable 5 m, A: RJ11 6/4 LINK.10, B: free wire end for connection to MP/PP terminal	ZK2-GEN

Mechanical accessories

Description	Type
RetroFIT+ adapter kit, F07/F10 (incl. screws F07), flat head/square, SW 17	ZPR05
RetroFIT+ adapter kit, F07/F10 (incl. screws F07), square 45° offset, SW 14	ZPR06
Adapter kit with spacer ring, F07, square 45° offset, SW 17	ZPR08
RetroFIT+ adapter kit, F07/F05/F10 (incl. screws F07), flat head/square, SW 14	ZPR09
RetroFIT+ adapter kit, F05/F07/F10 (incl. screws F05), flat head/square, SW 14	ZPR10
RetroFIT+ adapter kit, F07/F10 (incl. screws F07), square 45° offset, SW 18	ZPR11
RetroFIT+ adapter kit, F07/F10 (incl. screws F07), flat head/square, SW 16	ZPR12
Hand crank for PR/PM actuator	ZPR20

Electrical installation

Caution: Mains voltage!

Parallel connection of other actuators possible. Observe the performance data.

AC 24...240 V / DC 24...125 V, open/close

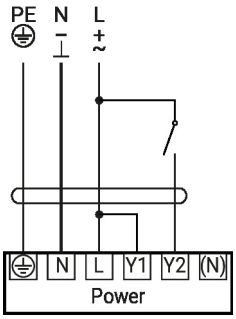

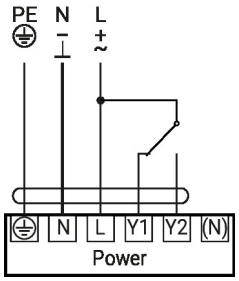

AC 24...240 V / DC 24...125 V, 3-point

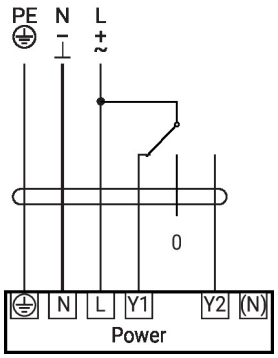

Electrical installation

Auxiliary switch

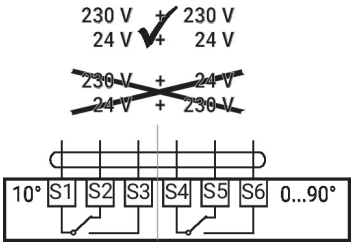

Operating controls and indicators

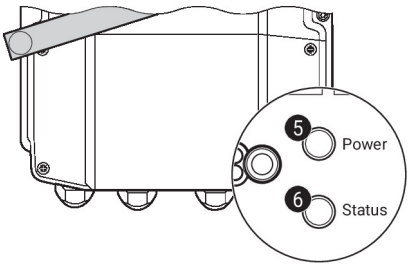

5 Push-button and LED display green

Off:	No power supply or malfunction
On:	In operation
Press button:	Triggers test run, followed by standard mode

6 Push-button and LED display yellow

Off:	Standard mode
On:	Test run active

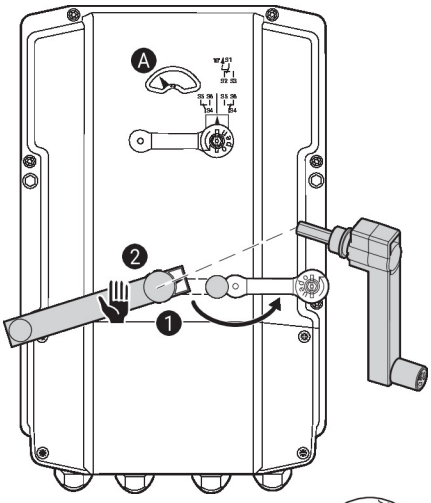

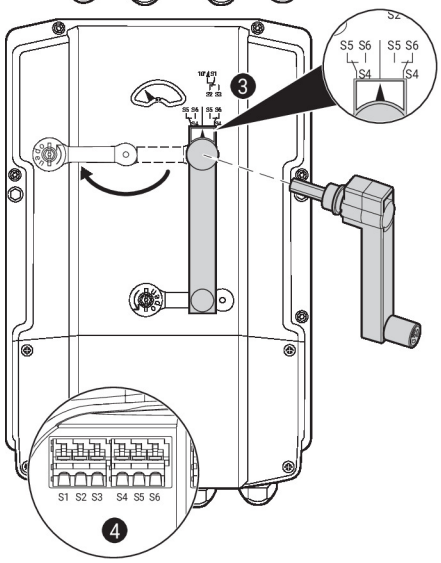

Auxiliary switch settings

Note: Perform settings on the actuator only in deenergised state.

For the auxiliary switch position settings, carry out points 1 to 4 successively.

1 Gear train disengagement
Opening the manual override cover and adjusting the hand crank.
Manual override is possible.

2 Manual override
Turn the hand crank until the desired switching position A is indicated and then remove the hand crank.

3 Auxiliary switch
For the auxiliary switch position settings, carry out points 1 to 4 successively.
Opening the auxiliary switch adjustment cover and adjusting the hand crank.
Turn the hand crank until the arrow points to the vertical line.

4 Terminals
Connect continuity tester to S4 + S5 or to S4 + S6.
If the auxiliary switch should switch in the opposite direction, rotate the hand crank by 180°.

Service

Using Belimo Assistant 2, device parameters can be modified. Belimo Assistant 2 can operate on a smartphone, tablet or PC. The available connection options vary depending on the hardware on which Belimo Assistant 2 is installed.

For more information about Belimo Assistant 2, refer to the Quick Guide – Belimo Assistant 2.

Wireless connection

Belimo devices marked with the NFC logo can be accessed either directly with an NFC-capable smartphone or with a Bluetooth-capable smartphone connected to Belimo Assistant Link.

Requirement:

- NFC- or Bluetooth-capable smartphone or tablet
- Belimo Assistant 2 (Google Play and Apple App Store)

Align the NFC-capable smartphone or Belimo Assistant Link with the device's NFC logo so that both NFC antennas are superposed.

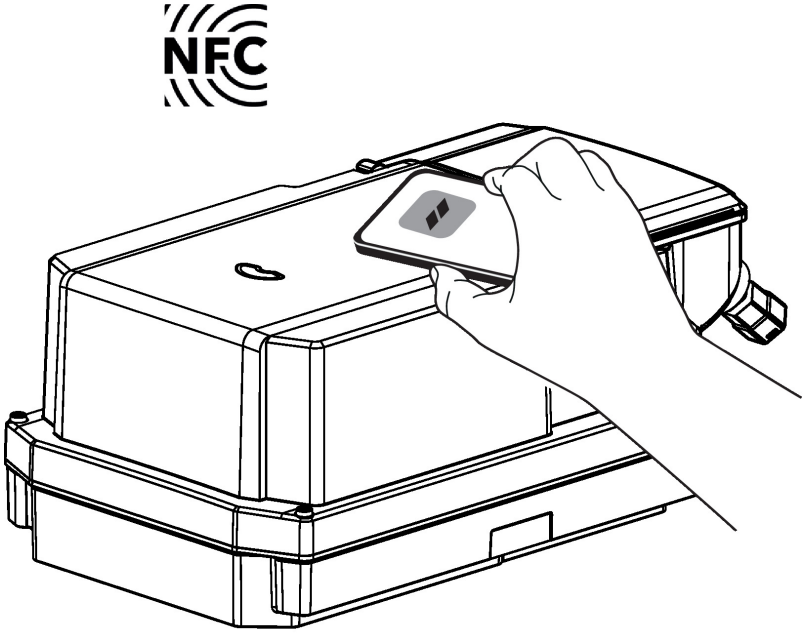

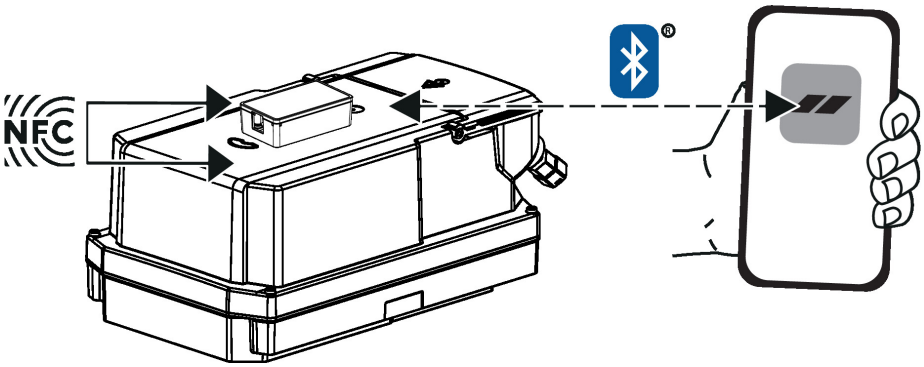

Service

Wired connection

Belimo devices can be accessed by connecting Belimo Assistant Link to the USB port on a PC or laptop and to the service socket or MP-Bus wire on the device.

Belimo Assistant 2 acts as MP client. Therefore, no other MP client shall be connected to the device.

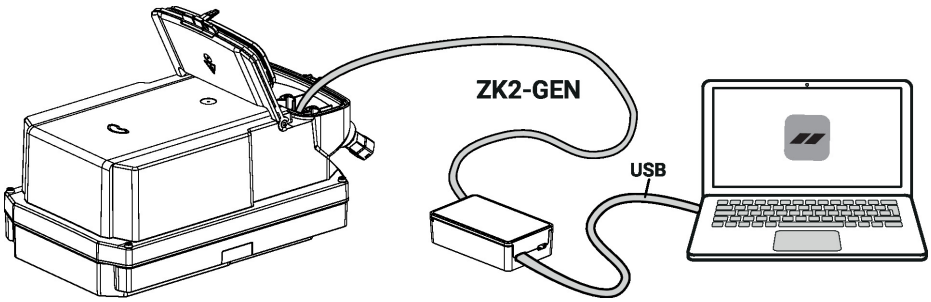

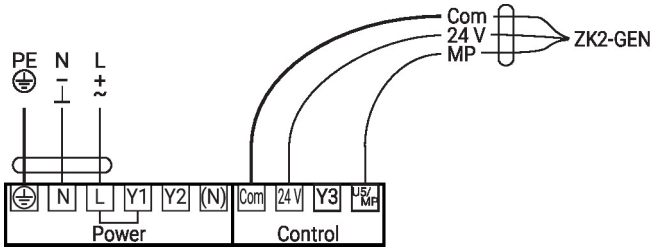

Dimensions

Shaft length

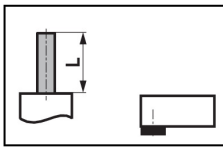	-
	22.5...33

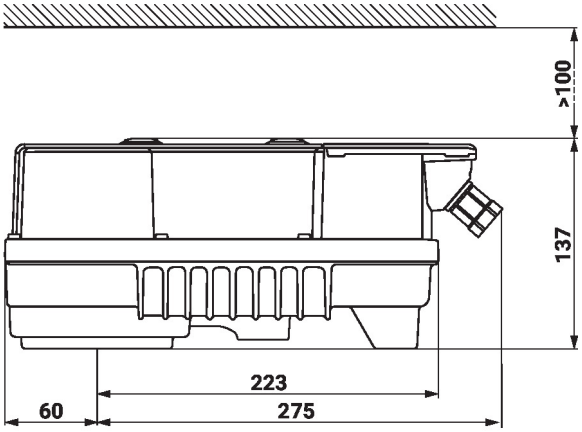

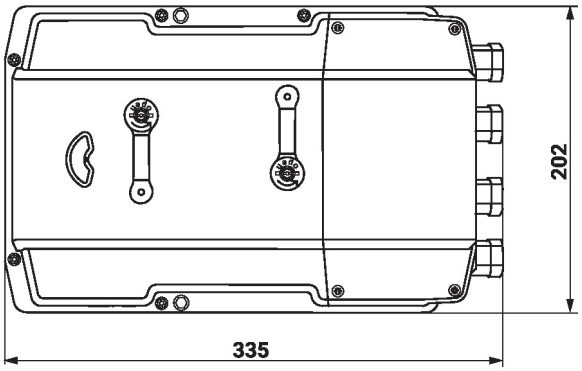

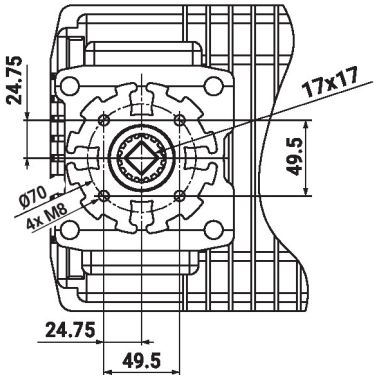

Further documentation

- Tool connections
- Installation instructions for actuators
- Quick Guide – Belimo Assistant 2