Changeover ball valve, 3-way, Internal thread

- For closed water systems
- For switching functions and open/close controls on the water side of air handling systems and heating systems
- Air-bubble tight (control path A – AB)

Picture may differ from product

Type overview

Type	DN	Rp ["]	Kvs [m³/h]	PN
R3015-S1	15	1/2	15	40
R3020-S2	20	3/4	32	40
R3025-S2	25	1	26	40
R3032-S3	32	1 1/4	32	25
R3040-S3	40	1 1/2	31	25
R3050-S4	50	2	49	25

Technical data

Functional data	Fluid	Water, water with glycol up to max. 50% vol.
	Fluid temperature	-10...120°C [14...248°F]
	Fluid temperature note	At a fluid temperature of -10...2°C, a spindle heater or a valve neck extension is recommended. The allowed fluid temperature can be limited, depending on the type of actuator. Limitations can be found in the respective data sheets of the actuators.
	Close-off pressure Δps	1400 kPa
	Differential pressure Δpmax	1000 kPa
	Differential pressure note	200 kPa for low-noise operation
	Flow	Bypass B – AB: approx. 50% of Kvs value
	Leakage rate	Port A – AB: air-bubble tight, leakage rate A (EN 12266-1); Bypass B – AB: Leakage class I (EN 1349 and EN 60534-4) max. 1% of the Kvs value
	Angle of rotation	90°
	Pipe connection	Internal thread according to ISO 7-1
	Installation orientation	upright to horizontal (in relation to the spindle)
	Servicing	maintenance-free
Materials	Valve body	nickel-plated brass body
	Body finish	nickel-plated
	Closing element	Stainless steel
	Spindle	Stainless steel

Technical data

Materials

Spindle seal	EPDM O-ring
Seat	PTFE, O-ring EPDM

Safety notes

- The valve has been designed for use in stationary heating, ventilation and air-conditioning systems and must not be used outside the specified field of application, especially in aircraft or in any other airborne means of transport.
- Only authorised specialists may carry out installation. All applicable legal or institutional installation regulations must be complied with during installation.
- The valve does not contain any parts that can be replaced or repaired by the user.
- The valve may not be disposed of as household refuse. All locally valid regulations and requirements must be observed.
- When determining the flow rate characteristic of controlled devices, the recognised directives must be observed.

Product features

Operating mode

The change-over ball valve is adjusted by a rotary actuator. The rotary actuator is controlled by an open/close signal.

Accessories

Electrical accessories

Description	Type
Stem heater for ball valve DN 15...50, AC/DC 24 V, 20 W	ZR24-2

Mechanical accessories

Description	Type
Valve neck extension for ball valve DN 15...50	ZR-EXT-01
Pipe connector for ball valve with internal thread DN 15 Rp 1/2"	ZR2315
Pipe connector for ball valve with internal thread DN 20 Rp 3/4"	ZR2320
Pipe connector for ball valve with internal thread DN 25 Rp 1"	ZR2325
Pipe connector for ball valve with internal thread DN 32 Rp 1 1/4"	ZR2332
Pipe connector for ball valve with internal thread DN 40 Rp 1 1/2"	ZR2340
Pipe connector for ball valve with internal thread DN 50 Rp 2"	ZR2350

Installation notes

Permissible installation orientation

The ball valve can be installed upright to horizontal. The ball valve may not be installed in a hanging position, i.e. with the spindle pointing downwards.

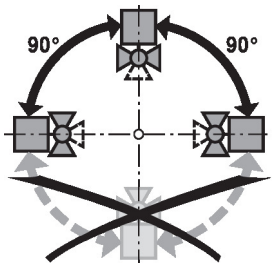

Water quality requirements

The water quality requirements specified in VDI 2035 must be adhered to.

Belimo valves are regulating devices. For the valves to function correctly in the long term, they must be kept free from particle debris (e.g. welding beads during installation work). The installation of a suitable strainer is recommended.

Installation notes

Servicing

Ball valves and rotary actuators are maintenance-free.

Before any service work on the control element is carried out, it is essential to isolate the rotary actuator from the power supply (by unplugging the electrical cable if necessary). Any pumps in the part of the piping system concerned must also be switched off and the appropriate slide valves closed (allow all components to cool down first if necessary and always reduce the system pressure to ambient pressure level).

The system must not be returned to service until the ball valve and the rotary actuator have been correctly reassembled in accordance with the instructions and the pipeline has been refilled by professionally trained personnel.

Flow direction

The direction of flow, specified by an arrow on the housing, is to be complied with, since otherwise the ball valve could become damaged. Please ensure that the ball is in the correct position (marking on the spindle).

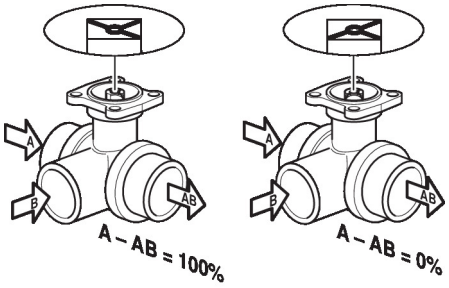

Dimensions

Dimensional drawings

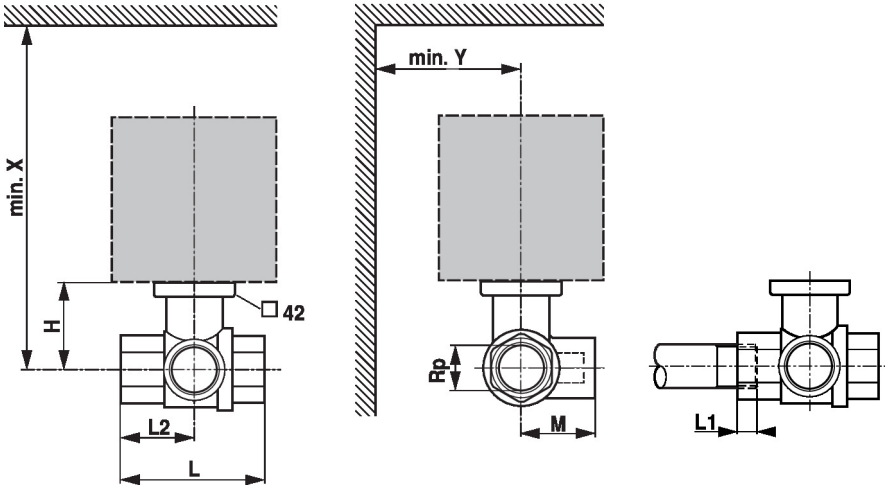

L1: Maximum screwing depth.
X/Y: Minimum distance with respect to the valve centre.
The actuator dimensions can be found on the respective actuator data sheet.

Type	DN	Rp [“]	L [mm]	L2 [mm]	L1 [mm]	M [mm]	H [mm]	X [mm]	Y [mm]	kg
R3015-S1	15	1/2	67	36	13	36	44	230	90	0.33
R3020-S2	20	3/4	78	41	14	41.5	46	235	90	0.46
R3025-S2	25	1	88	44	16	45	46	235	90	0.60
R3032-S3	32	1 1/4	105	55	19	55.5	50.5	240	90	0.90
R3040-S3	40	1 1/2	111	56	19	56	50.5	240	90	1.2
R3050-S4	50	2	125	65	22	68	56	245	90	1.8

Further documentation

- The complete product range for water applications
- Data sheets for actuators
- Installation instructions for actuators and/or ball valves
- General notes for project planning