Rotary actuator fail-safe for adjusting dampers in technical building installations

- Air damper size up to approx. 4 m²
- Torque motor 20 Nm
- Nominal voltage AC 24...240 V / DC 24...125 V
- Control Open/close

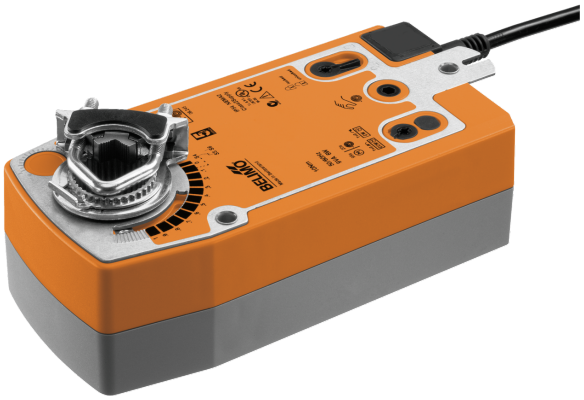

Picture may differ from product

Technical data

Electrical data	Nominal voltage	AC 24...240 V / DC 24...125 V
	Nominal voltage frequency	50/60 Hz
	Nominal voltage range	AC 19.2...264 V / DC 21.6...137.5 V
	Power consumption in operation	7 W
	Power consumption in rest position	3.5 W
	Power consumption for wire sizing	18 VA
	Connection supply / control	Cable 1 m, 2x 0.75 mm²
	Parallel operation	Yes (note the performance data)
Functional data	Torque motor	20 Nm
	Torque fail-safe	20 Nm
	Direction of motion motor	selectable by mounting L/R
	Direction of motion fail-safe	selectable by mounting L/R
	Manual override	by means of hand crank and locking switch
	Angle of rotation	Max. 95°
	Angle of rotation note	can be limited by adjustable mechanical end stop
	Running time motor	75 s / 90°
	Running time fail-safe	<20 s @ -20...50°C, <60 s @ -30°C
	Sound power level, motor	45 dB(A)
	Mechanical interface	Universal shaft clamp 10...25.4 mm
	Position indication	Mechanical
	Service life	Min. 60'000 fail-safe positions
Safety data	Protection class IEC/EN	II, reinforced insulation
	Protection class UL	II, reinforced insulation
	Degree of protection IEC/EN	IP54
	Degree of protection NEMA/UL	NEMA 2
	Housing	UL Enclosure Type 2
	EMC	CE according to 2014/30/EU
	Low voltage directive	CE according to 2014/35/EU
	Certification IEC/EN	IEC/EN 60730-1 and IEC/EN 60730-2-14
	UL Approval	cULus according to UL60730-1A, UL60730-2-14 and CAN/CSA E60730-1 The UL marking on the actuator depends on the production site, the device is UL-compliant in any case

Technical data

Safety data	Hygiene test	According to VDI 6022 Part 1 / SWKI VA 104-01, cleanable and disinfectable, low emission
	Type of action	Type 1.AA
	Rated impulse voltage supply / control	4 kV
	Pollution degree	3
	Ambient humidity	Max. 95% RH, non-condensing
	Ambient temperature	-30...50°C [-22...122°F]
	Storage temperature	-40...80°C [-40...176°F]
	Servicing	maintenance-free
Weight	Weight	2.2 kg

Safety notes

- This device has been designed for use in stationary heating, ventilation and air-conditioning systems and must not be used outside the specified field of application, especially in aircraft or in any other airborne means of transport.
- Outdoor application: only possible in case that no (sea) water, snow, ice, insolation or aggressive gases interfere directly with the device and that it is ensured that the ambient conditions remain within the thresholds according to the data sheet at any time.
- Caution: Mains voltage!
- Only authorised specialists may carry out installation. All applicable legal or institutional installation regulations must be complied with during installation.
- The device may only be opened at the manufacturer's site. It does not contain any parts that can be replaced or repaired by the user.
- Cables must not be removed from the device.
- To calculate the torque required, the specifications supplied by the damper manufacturers concerning the cross-section and the design, as well as the installation situation and the ventilation conditions must be observed.
- The device contains electrical and electronic components and must not be disposed of as household refuse. All locally valid regulations and requirements must be observed.

Product features

Operating mode

The actuator is equipped with a universal power supply module that can utilise supply voltages of AC 24...240 V and DC 24...125V.

The actuator moves the damper to the operating position at the same time as tensioning the return spring. The damper is turned back to the fail-safe position by spring force when the supply voltage is interrupted.

Simple direct mounting

Simple direct mounting on the damper shaft with a universal shaft clamp, supplied with an anti-rotation mechanism to prevent the actuator from rotating.

Manual override

By using the hand crank the damper can be actuated manually and engaged with the locking switch at any position. Unlocking is carried out manually or automatically by applying the operating voltage.

Adjustable angle of rotation

Adjustable angle of rotation with mechanical end stops.

High functional reliability

The actuator is overload protected, requires no limit switches and automatically stops when the end stop is reached.

Accessories

Electrical accessories

Description	Type
Auxiliary switch 2x SPDT	S2A-F

Accessories

	Description	Type
	Feedback potentiometer 1 kΩ	P1000A-F

Mechanical accessories	Description	Type
	Shaft extension 240 mm ø20 mm for damper shaft ø8...22.7 mm	AV8-25
	End stop indicator	IND-AFB
	Shaft clamp reversible, for central mounting, for damper shafts ø12.7 / 19.0 / 25.4 mm	K7-2
	Ball joint suitable for damper crank arm KH8 / KH10	KG10A
	Ball joint suitable for damper crank arm KH8	KG8
	Damper crank arm Slot width 8.2 mm, clamping range ø10...18 mm	KH8
	Actuator arm, for 3/4" shafts, clamping range ø10...22 mm, Slot width 8.2 mm	KH-AFB
	Form fit insert 10x10 mm, Multipack 20 pcs.	ZF10-NSA-F
	Form fit insert 12x12 mm, Multipack 20 pcs.	ZF12-NSA-F
	Form fit insert 15x15 mm, Multipack 20 pcs.	ZF15-NSA-F
	Form fit insert 16x16 mm, Multipack 20 pcs.	ZF16-NSA-F
	Mounting kit for linkage operation for flat and side installation	ZG-AFB
	Baseplate extension	Z-SF
	Anti-rotation mechanism 230 mm, Multipack 20 pcs.	Z-ARS230L
	Hand crank 63 mm	ZKN2-B

Electrical installation

Caution: Mains voltage!

Parallel connection of other actuators possible. Observe the performance data.

Wire colours:
1 = blue
2 = brown

AC 24...240 V / DC 24...125 V, open/close

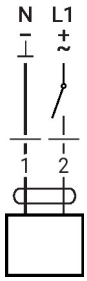

Dimensions

Spindle length

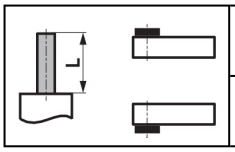	Min. 85
	Min. 15

Clamping range

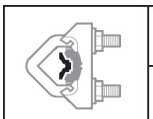	○	□	◇
	10...22	10	14...25.4
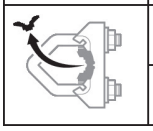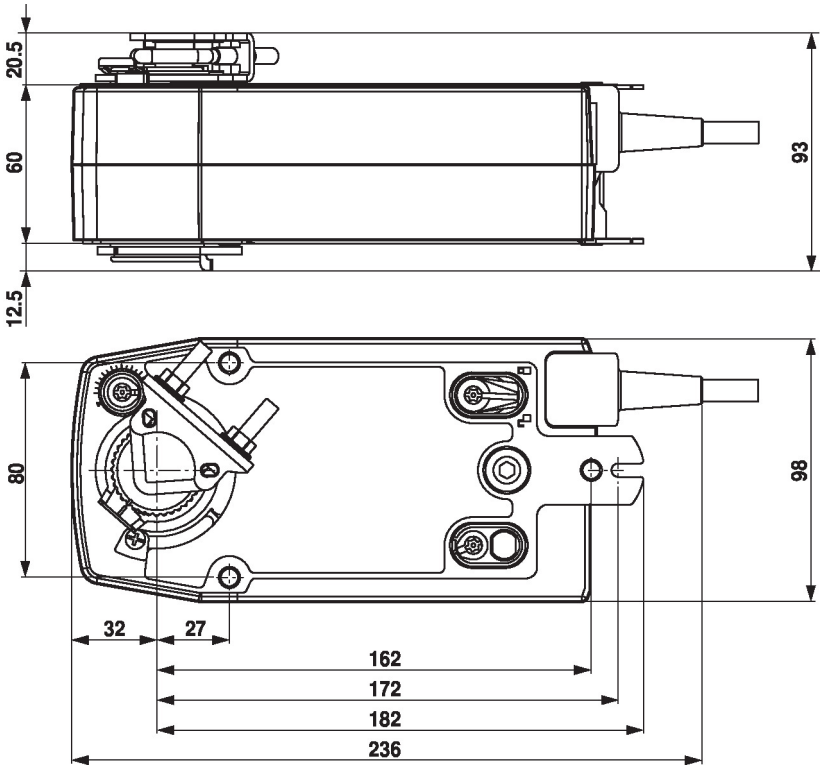	○	□	
	19...25.4	12...18