Communicative damper actuator for adjusting dampers in technical building installations

- Air damper size up to approx. 4 m²
- Torque motor 20 Nm
- Nominal voltage AC/DC 24 V
- Control modulating, communicative, hybrid
- Running time motor 35 s
- Communication via BACnet MS/TP, Modbus RTU, Belimo-MP-Bus or conventional control
- Conversion of sensor signals

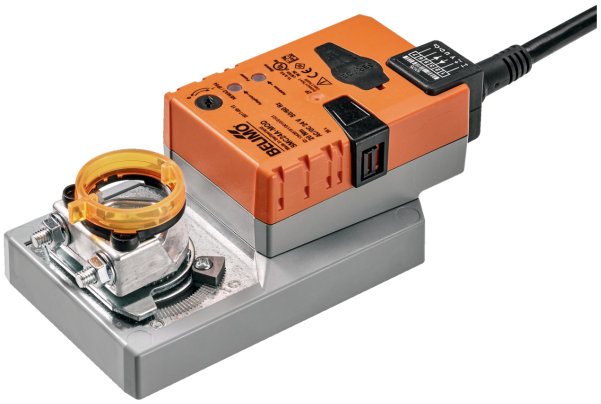

Picture may differ from product

## Technical data

| | | |
|---|---|---|
| **Electrical data** | Nominal voltage | AC/DC 24 V |
| | Nominal voltage frequency | 50/60 Hz |
| | Nominal voltage range | AC 19.2...28.8 V / DC 21.6...28.8 V |
| | Power consumption in operation | 4 W |
| | Power consumption in rest position | 1.5 W |
| | Power consumption for wire sizing | 7 VA |
| | Connection supply / control | Cable 1 m, 6x 0.75 mm² |
| **Data bus communication** | Communicative control | BACnet MS/TP<br>Modbus RTU (factory setting)<br>MP-Bus |
| | Number of nodes | BACnet / Modbus see interface description<br>MP-Bus max. 8 |
| **Functional data** | Torque motor | 20 Nm |
| | Torque variable | 25%, 50%, 75% reduced |
| | Operating range Y | 2...10 V |
| | Operating range Y variable | 0.5...10 V |
| | Position accuracy | ±5% |
| | Direction of motion motor | selectable with switch 0/1 |
| | Direction of motion variable | electronically reversible |
| | Direction of motion note | Y = 0%: At switch position 0 (ccw rotation) / 1 (cw rotation) |
| | Manual override | with push-button, can be locked |
| | Angle of rotation | Max. 95° |
| | Angle of rotation note | can be limited on both sides with adjustable mechanical end stops |
| | Running time motor | 35 s / 90° |
| | Running time motor variable | 35...150 s |
| | Sound power level, motor | 55 dB(A) |
| | Adaptation setting range | manual |
| | Adaptation setting range variable | No action<br>Adaptation when switched on<br>Adaptation after pushing the manual override button |
| | Override control, controllable via bus communication | MAX (maximum position) = 100%<br>MIN (minimum position) = 0%<br>ZS (intermediate position) = 50% |
| | Override control variable | MAX = (MIN + 32%)...100%<br>MIN = 0%...(MAX – 32%)<br>ZS = MIN...MAX |
| | Mechanical interface | Universal shaft clamp reversible 10...20 mm |

## Technical data

| | | |
|---|---|---|
| **Functional data** | Position indication | Mechanical, pluggable |
| **Safety data** | Protection class IEC/EN | III, Safety Extra-Low Voltage (SELV) |
| | Power source UL | Class 2 Supply |
| | Degree of protection IEC/EN | IP54 |
| | Degree of protection NEMA/UL | NEMA 2 |
| | Housing | UL Enclosure Type 2 |
| | EMC | CE according to 2014/30/EU |
| | Certification IEC/EN | IEC/EN 60730-1 and IEC/EN 60730-2-14 |
| | UL Approval | cULus according to UL60730-1A, UL60730-2-14 and CAN/CSA E60730-1<br>The UL marking on the actuator depends on the production site, the device is UL-compliant in any case |
| | Hygiene test | According to VDI 6022 Part 1 |
| | Type of action | Type 1 |
| | Rated impulse voltage supply / control | 0.8 kV |
| | Pollution degree | 3 |
| | Ambient humidity | Max. 95% RH, non-condensing |
| | Ambient temperature | -30...50°C [-22...122°F] |
| | Storage temperature | -40...80°C [-40...176°F] |
| | Servicing | maintenance-free |
| **Weight** | Weight | 1.0 kg |

## Safety notes

- This device has been designed for use in stationary heating, ventilation and air-conditioning systems and must not be used outside the specified field of application, especially in aircraft or in any other airborne means of transport.
- Outdoor application: Only possible if no (sea) water, snow, ice, sunlight or aggressive gases act directly on the device and if it is ensured that the ambient conditions remain within the limit values specified in the data sheet at all times.
- Only authorised specialists may carry out installation. All applicable legal or institutional installation regulations must be complied with during installation.
- The device may only be opened at the manufacturer's site. It does not contain any parts that can be replaced or repaired by the user.
- Cables must not be removed from the device.
- To calculate the torque required, the specifications supplied by the damper manufacturers concerning the cross-section and the design, as well as the installation situation and the ventilation conditions must be observed.
- The device contains electrical and electronic components and must not be disposed of as household refuse. All locally valid regulations and requirements must be observed.

## Product features

**Operating mode**
The actuator is fitted with an integrated interface for BACnet MS/TP, Modbus RTU and MP-Bus. It receives the digital control signal from the control system and returns the current status.

**Converter for sensors**
Connection option for a sensor (passive, active or with switching contact). In this way, the analogue sensor signal can be easily digitised and transferred to the bus systems : BACnet, Modbus or MP-Bus.

**Configurable device**
The factory settings cover the most common applications. Single parameters can be modified with Belimo Assistant 2.

## Product features

**Combination analogue - communicative (hybrid mode)**
With conventional control by means of an analogue control signal, BACnet or Modbus can be used for the communicative position feedback

**Simple direct mounting**
Simple direct mounting on the damper shaft with a universal shaft clamp, supplied with an anti-rotation mechanism to prevent the actuator from rotating.

**Manual override**
Manual override with push-button possible (the gear train is disengaged for as long as the button is pressed or remains locked).

**Adjustable angle of rotation**
Adjustable angle of rotation with mechanical end stops.

**High functional reliability**
The actuator is overload protected, requires no limit switches and automatically stops when the end stop is reached.

**Home position**
The first time the supply voltage is switched on, i.e. at the time of commissioning, the actuator carries out a synchronisation. The synchronisation is in the home position (0%).

The actuator then moves into the position defined by the control signal.

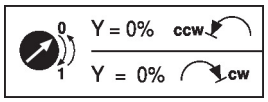


**Adaptation and synchronisation**
An adaptation can be triggered manually by pressing the "Adaptation" button or with Belimo Assistant 2. Both mechanical end stops are detected during the adaptation (entire setting range).

Automatic synchronisation after pressing the manual override button is configured. The synchronisation is in the home position (0%).

The actuator then moves into the position defined by the control signal.

A range of settings can be made using Belimo Assistant 2.

## Accessories

**Tools**

| Description | Type |
|---|---|
| Service tool for wired and wireless setup, on-site operation and troubleshooting. | Belimo Assistant 2 |
| Belimo Assistant Link Bluetooth and USB to NFC and MP-Bus converter for configurable and communicative devices | LINK.10 |
| Connecting cable 5 m, A: RJ11 6/4 LINK.10, B: 6-pin for connection to service socket | ZK1-GEN |
| Connecting cable 5 m, A: RJ11 6/4 LINK.10, B: free wire end for connection to MP/PP terminal | ZK2-GEN |

**Electrical accessories**

| Description | Type |
|---|---|
| Auxiliary switch 1x SPDT add-on | S1A |
| Auxiliary switch 2x SPDT add-on | S2A |
| Feedback potentiometer 140 Ω add-on | P140A |
| Feedback potentiometer 1 kΩ add-on | P1000A |
| Feedback potentiometer 10 kΩ add-on | P10000A |

**Mechanical accessories**

| Description | Type |
|---|---|
| Actuator arm for standard shaft clamp (reversible) | AH-20 |
| Shaft extension 240 mm ø20 mm for damper shaft ø12...21 mm CrNi | AV12-25-I |
| Shaft extension 240 mm ø20 mm for damper shaft ø8...22.7 mm | AV8-25 |
| Ball joint suitable for damper crank arm KH8 | KG8 |
| Ball joint suitable for damper crank arm KH8 / KH10 | KG10A |
| Damper crank arm Slot width 8.2 mm, clamping range ø10...18 mm | KH8 |
| Shaft clamp one-sided, clamping range ø8...26 mm, Multipack 20 pcs. | K-ENSA |
| Shaft clamp one-sided, clamping range ø12...26 mm, for CrNi shaft (INOX), Multipack 20 pcs. | K-ENSA-I |
| Shaft clamp reversible, clamping range ø10...20 mm | K-SA |
| Anti-rotation mechanism 180 mm, Multipack 20 pcs. | Z-ARS180 |
| Anti-rotation mechanism 230 mm, Multipack 20 pcs. | Z-ARS230 |
| Form fit insert 10x10 mm, Multipack 20 pcs. | ZF10-NSA |
| Form fit insert 12x12 mm, Multipack 20 pcs. | ZF12-NSA |

## Accessories

| Description | Type |
|---|---|
| Form fit insert 15x15 mm, Multipack 20 pcs. | ZF15-NSA |
| Form fit insert 16x16 mm, Multipack 20 pcs. | ZF16-NSA |
| Mounting kit for linkage operation for flat installation | ZG-SMA |
| Position indicator, Multipack 20 pcs. | Z-PI |
| Baseplate extension for SM..A to SM../AM../SMD24R | Z-SMA |

## Electrical installation

**Supply from isolating transformer.**

**The wiring of Modbus RTU (RS-485) is to be carried out in accordance with applicable regulations (www.modbus.org). The device has switchable resistors for bus termination.**

**Modbus / BACnet: Supply and communication are not galvanically isolated. COM and ground of the devices must be connected to each other.**

**Wire colours:**
1 = black
2 = red
3 = white
5 = orange
6 = pink
7 = grey

**Functions:**
C1 = D- (wire 6)
C2 = D+ (wire 7)

BACnet MS/TP / Modbus RTU

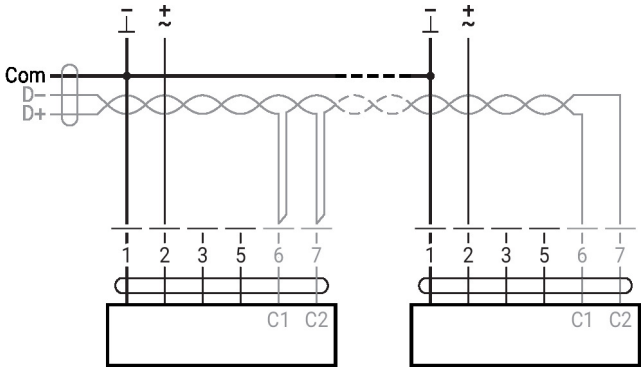


## Further electrical installations

**MP-Bus**

MP-Bus Network topology

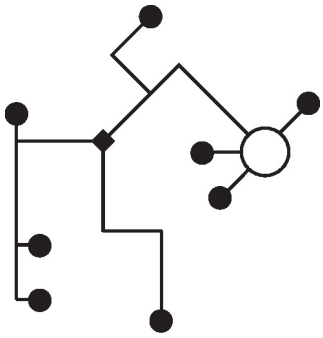

There are no restrictions for the network topology (star, ring, tree or mixed forms are permitted).
Supply and communication in one and the same 3-wire cable
• no shielding or twisting necessary
• no terminating resistors required

MP-Bus

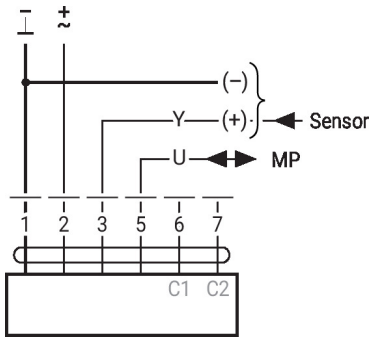

## Further electrical installations

### Functions with specific parameters (configuration necessary)

Modbus RTU / BACnet MS/TP with analogue setpoint (hybrid operation)

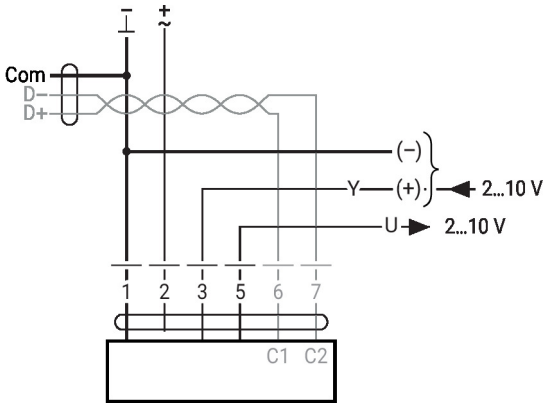


### Sensor connection

Connection with active sensor, e.g. 0...10 V @ 0...50°C

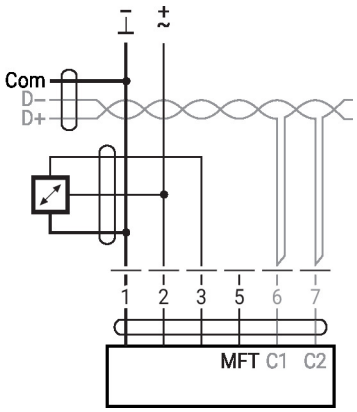


Possible input voltage range:
0...10 V
Resolution 30 mV

Connection with switching contact, e.g. differential pressure switch

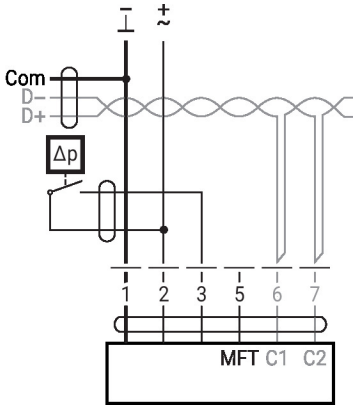


Switching contact requirements:
The switching contact must be able to switch a current of 16 mA at 24 V accurately.
Start point of the operating range must be configured on the MOD actuator as ≥0.5 V.

## Further electrical installations

### Sensor connection

Connection with passive sensor, e.g. Pt1000, Ni1000, NTC

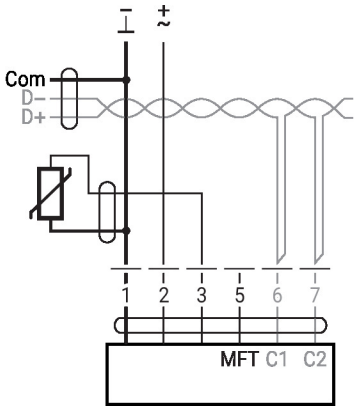


| | | |
|---|---|---|
| Ni1000 | –28...+98°C | 850...1600 Ω [2] |
| PT1000 | –35...+155°C | 850...1600 Ω [2] |
| NTC | –10...+160°C [1] | 200 Ω...60 kΩ [2] |

1) depending on type
2) Resolution 1 Ohm
Compensation of the measured value is recommended

## Operating controls and indicators

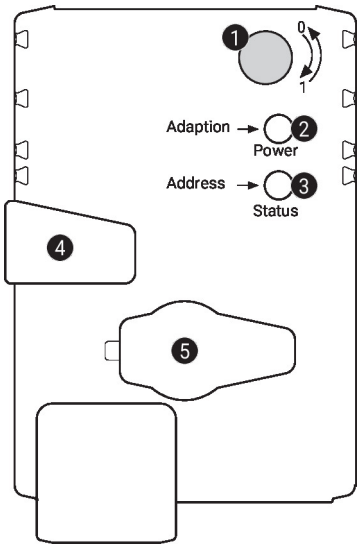


**1 Direction-of-rotation switch**

| | |
|---|---|
| Switch over: | Direction of rotation changes |

**2 Push-button and LED display green**

| | |
|---|---|
| Off: | No power supply or malfunction |
| On: | In operation |
| Flashing: | In address mode: Pulses according to set address (1...16)<br>When starting: Reset to factory setting (Communication) |
| Press button: | In standard mode: Triggers angle-of-rotation adaptation<br>In address mode: Confirmation of set address (1...16) |

**3 Push-button and LED display yellow**

| | |
|---|---|
| Off: | Standard mode |
| On: | Adaptation or synchronisation process active<br>or actuator in address mode (LED display green flashing) |
| Flickering: | BACnet / Modbus communication active |
| Press button: | In operation (>3 s): Switch address mode on and off<br>In address mode: Address setting by pressing several times<br>When starting (>5 s): Reset to factory setting (Communication) |

**4 Manual override button**

| | |
|---|---|
| Press button: | Gear train disengages, motor stops, manual override possible |
| Release button: | Gear train engages, synchronisation starts, followed by standard mode |

**5 Service plug**

For connecting configuration and service tools

**Check power supply connection**

| | |
|---|---|
| 2 Off and 3 On | Possible wiring error in power supply |

## Service

Using Belimo Assistant 2, device parameters can be modified. Belimo Assistant 2 can operate on a smartphone, tablet or PC. The available connection options vary depending on the hardware on which Belimo Assistant 2 is installed.

For more information about Belimo Assistant 2, refer to the Quick Guide – Belimo Assistant 2.

**Wired connection**

Belimo devices can be accessed by connecting Belimo Assistant Link to the USB port on a PC or laptop and to the Service Socket or MP-Bus wire on the device.

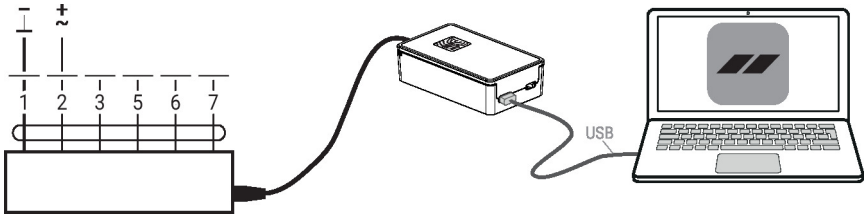


**Quick addressing**

1. Press the "Address" button until the green "Power" LED is no longer illuminated. The green "Power" LED flashes in accordance with the previously set address.

2. Set the address by pressing the "Address" button the corresponding number of times (1...16).

3. The green LED flashes in accordance with the address that has been entered (1...16). If the address is not correct, it can be reset in accordance with step 2.

4. Confirm the address setting by pressing the green "Adaptation" button.

If the address is not confirmed within 60 seconds, the address procedure will be ended. Any address change that has already been started will be discarded.

The resulting BACnet MS/TP and Modbus RTU address is made up of the set basic address plus the short address (e.g. 100+7=107).

## Dimensions

**Shaft length**

| | |
|---|---|
| 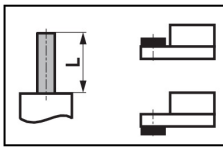 | Min. 48 |
| | Min. 20 mm [0.75"] |

**Clamping range**

| | | | |
|---|---|---|---|
| | 10...20 | ≥10 | ≤20 |
| **CrNi (INOX)** | 12...20 | ≥10 | ≤20 |

When using a round shaft made of CrNi (INOX): ø12...20 mm

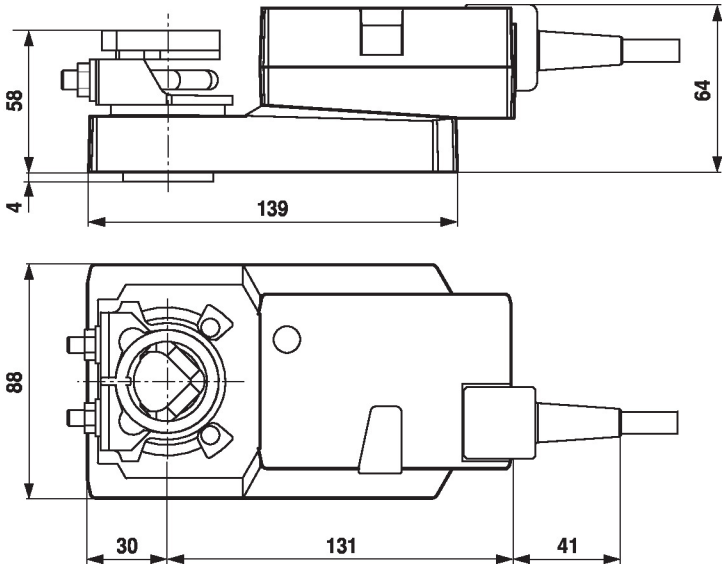

## Further documentation

- Tool connections
- BACnet Interface description
- Modbus Interface description
- Overview MP Cooperation Partners
- MP Glossary
- Introduction to MP-Bus Technology
- Quick Guide – Belimo Assistant 2

## Application notes

- For digital control of actuators in VAV applications patent EP 3163399 must be considered.