Damper actuator for adjusting dampers in technical building installations

- Air damper size up to approx. 3.2 m²
- Torque motor 16 Nm
- Nominal voltage AC 100...240 V
- Control Open/close, 3-point
- Running time motor 20 s

Picture may differ from product

## Technical data

| | | |
|---|---|---|
| **Electrical data** | Nominal voltage | AC 100...240 V |
| | Nominal voltage frequency | 50/60 Hz |
| | Nominal voltage range | AC 85...265 V |
| | Power consumption in operation | 4.5 W |
| | Power consumption in rest position | 1 W |
| | Power consumption for wire sizing | 8 VA |
| | Inrush current (Imax) | 4.0 A @ 5 ms |
| | Connection supply / control | Cable 1 m, 3x 0.75 mm² |
| | Parallel operation | Yes (note the performance data) |
| **Functional data** | Torque motor | 16 Nm |
| | Direction of motion motor | selectable with switch 0 (ccw rotation) / 1 (cw rotation) |
| | Manual override | with push-button, can be locked |
| | Angle of rotation | Max. 95° |
| | Angle of rotation note | can be limited on both sides with adjustable mechanical end stops |
| | Running time motor | 20 s / 90° |
| | Sound power level, motor | 55 dB(A) |
| | Mechanical interface | Universal shaft clamp reversible 10...20 mm |
| | Position indication | Mechanical, pluggable |
| **Safety data** | Protection class IEC/EN | II, reinforced insulation |
| | Protection class UL | II, reinforced insulation |
| | Degree of protection IEC/EN | IP54 |
| | Degree of protection NEMA/UL | NEMA 2 |
| | Housing | UL Enclosure Type 2 |
| | EMC | CE according to 2014/30/EU |
| | Low voltage directive | CE according to 2014/35/EU |
| | Certification IEC/EN | IEC/EN 60730-1 and IEC/EN 60730-2-14 |
| | UL Approval | cULus according to UL60730-1A, UL60730-2-14 and CAN/CSA E60730-1<br>The UL marking on the actuator depends on the production site, the device is UL-compliant in any case |
| | Hygiene test | According to VDI 6022 Part 1 / SWKI VA 104-01, cleanable and disinfectable, low emission |

## Technical data

| | | |
|---|---|---|
| **Safety data** | Type of action | Type 1 |
| | Rated impulse voltage supply / control | 4 kV |
| | Pollution degree | 3 |
| | Ambient humidity | Max. 95% RH, non-condensing |
| | Ambient temperature | -30...50°C [-22...122°F] |
| | Storage temperature | -40...80°C [-40...176°F] |
| | Servicing | maintenance-free |
| **Weight** | Weight | 1.0 kg |

## Safety notes

- This device has been designed for use in stationary heating, ventilation and air-conditioning systems and must not be used outside the specified field of application, especially in aircraft or in any other airborne means of transport.
- Outdoor application: only possible in case that no (sea) water, snow, ice, insolation or aggressive gases interfere directly with the device and that it is ensured that the ambient conditions remain within the thresholds according to the data sheet at any time.
- Caution: Mains voltage!
- Only authorised specialists may carry out installation. All applicable legal or institutional installation regulations must be complied with during installation.
- The device may only be opened at the manufacturer's site. It does not contain any parts that can be replaced or repaired by the user.
- Cables must not be removed from the device.
- To calculate the torque required, the specifications supplied by the damper manufacturers concerning the cross-section and the design, as well as the installation situation and the ventilation conditions must be observed.
- The device contains electrical and electronic components and must not be disposed of as household refuse. All locally valid regulations and requirements must be observed.

## Product features

**Simple direct mounting**
Simple direct mounting on the damper shaft with a universal shaft clamp, supplied with an anti-rotation mechanism to prevent the actuator from rotating.

**Manual override**
Manual override with push-button possible (the gear train is disengaged for as long as the button is pressed or remains locked).

**Adjustable angle of rotation**
Adjustable angle of rotation with mechanical end stops.

**High functional reliability**
The actuator is overload protected, requires no limit switches and automatically stops when the end stop is reached.

## Accessories

**Electrical accessories**

| Description | Type |
|---|---|
| Auxiliary switch 1x SPDT add-on | S1A |
| Auxiliary switch 2x SPDT add-on | S2A |
| Feedback potentiometer 140 Ω add-on | P140A |
| Feedback potentiometer 1 kΩ add-on | P1000A |
| Feedback potentiometer 10 kΩ add-on | P10000A |

**Mechanical accessories**

| Description | Type |
|---|---|
| Actuator arm for standard shaft clamp (reversible) | AH-20 |
| Shaft extension 240 mm ø20 mm for damper shaft ø12...21 mm CrNi | AV12-25-I |
| Shaft extension 240 mm ø20 mm for damper shaft ø8...22.7 mm | AV8-25 |
| Ball joint suitable for damper crank arm KH8 | KG8 |
| Ball joint suitable for damper crank arm KH8 / KH10 | KG10A |

## Accessories

| Description | Type |
|---|---|
| Damper crank arm Slot width 8.2 mm, clamping range ø10...18 mm | KH8 |
| Shaft clamp one-sided, clamping range ø8...26 mm, Multipack 20 pcs. | K-ENSA |
| Shaft clamp one-sided, clamping range ø12...26 mm, for CrNi shaft (INOX), Multipack 20 pcs. | K-ENSA-I |
| Shaft clamp reversible, clamping range ø10...20 mm | K-SA |
| Anti-rotation mechanism 230 mm, Multipack 20 pcs. | Z-ARS230 |
| Form fit insert 10x10 mm, Multipack 20 pcs. | ZF10-NSA |
| Form fit insert 12x12 mm, Multipack 20 pcs. | ZF12-NSA |
| Form fit insert 15x15 mm, Multipack 20 pcs. | ZF15-NSA |
| Form fit insert 16x16 mm, Multipack 20 pcs. | ZF16-NSA |
| Mounting kit for linkage operation for flat installation | ZG-SMA |
| Position indicator, Multipack 20 pcs. | Z-PI |
| Baseplate extension for SM..A to SM../AM../SMD24R | Z-SMA |

## Electrical installation

**Caution: Mains voltage!**

**Parallel connection of other actuators possible. Observe the performance data.**

**Wire colours:**
1 = blue
2 = brown
3 = white

AC 230 V, open/close

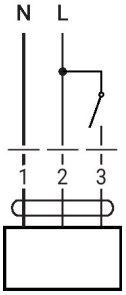


AC 230 V, 3-point

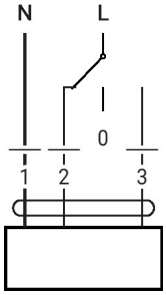


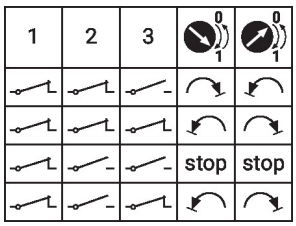

## Dimensions

### Spindle length

| | |
|---|---|
| 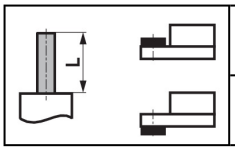 | Min. 48 |
| | Min. 20 mm [0.75"] |

### Clamping range

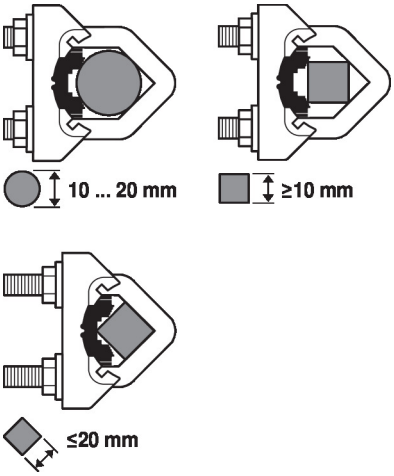

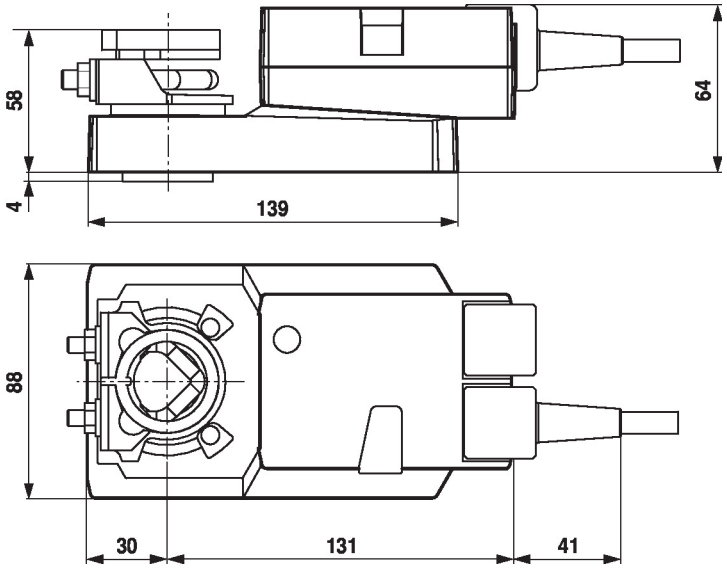
When using a round shaft made of CrNi (INOX): ø12...20 mm