VAV-Universal retrofit version with integrated Δp sensor for comfort areas and contaminated air. Can be combined with damper actuator optimally suited to the room pressure application. Field of application: retrofit applications in HVAC systems

- Application: Room pressure control in comfort and sensitive areas
- Belimo M1R, static diaphragm sensor
- Functional range differential pressure -75...75 Pa
- suitable for ...-VST-RE actuator
- Control communicative, hybrid, modulating (0/2...10 V)
- Communication via BACnet MS/TP, Modbus RTU or Belimo MP-Bus
- Conversion of sensor signals
- Tool connection: Service socket, NFC interface
- For configuration, a RetroFIT+ release code is needed

Picture may differ from product

Technical data

Electrical data	Nominal voltage	AC/DC 24 V
	Nominal voltage frequency	50/60 Hz
	Nominal voltage range	AC 19.2...28.8 V / DC 21.6...28.8 V
	Power consumption in operation	1.5 W
	Power consumption for wire sizing	2 VA plus connected VST actuator
	Inrush current (Imax)	20.0 A @ 5 ms, incl. actuator
	Connection supply / control	Terminals 2.5 mm²
	Sensor input S1	Connection of external sensor (passive / active / switch)
	Actuator Connection (I) (M)	AC/DC 24 V, PP-Link for VST actuator
Data bus communication	Communicative control	BACnet MS/TP Modbus RTU MP-Bus
	Number of nodes	BACnet / Modbus see interface description MP-Bus max. 8
Functional data	Operating range Y	2...10 V
	Input impedance	100 kΩ
	Operating range Y variable	0...10 V
	Position feedback U note	Max. 0.5 mA Options: Δp / Position
	Position feedback U variable	0...10 V Start point 0...8 V End point 2...10 V
	Override control	z1 motor stop / damper OPEN (AC/DC 24 V) z2 damper CLOSE / MAX (AC/DC 24 V)
	Configuration	via Belimo Assistant 2
Measuring data	Measuring principle	Belimo M1R, static diaphragm sensor
	Installation orientation	position-independent, no zeroing necessary
	Functional range differential pressure	-75...75 Pa
	Burst pressure	±7 kPa
	Condition measuring air	0...50°C / 5...95% RH, non-condensing
	Pressure tube connection	Nipple diameter 5.3 mm for pressure tube (5 mm inner diameter)

Technical data

Safety data	Protection class IEC/EN	III, Safety Extra-Low Voltage (SELV)
	Protection class UL	III, Safety Extra-Low Voltage (SELV)
	Power source UL	Class 2 Supply
	Degree of protection IEC/EN	IP42
	Degree of protection NEMA/UL	NEMA 1
	Housing	UL Enclosure Type 1
	EU Conformity	CE Marking
	Certification IEC/EN	IEC/EN 60730-1
	UL Approval	cULus according to UL60730-1, CAN/CSA E60730-1
	UL 2043 Compliant	Suitable for use in air plenums per Section 300.22(C) of the NEC and Section 602 of the IMC
	Type of action	Type 1
	Rated impulse voltage supply / control	0.8 kV
	Pollution degree	2
	Ambient humidity	Max. 95% RH, non-condensing
	Ambient temperature	0...50°C [32...122°F]
	Storage temperature	-40...80°C [-40...176°F]
	Servicing	maintenance-free
Weight	Weight	0.32 kg

Safety notes

- The device must not be used outside the specified field of application, especially not in aircraft or in any other airborne means of transport.
- Only authorised specialists may carry out installation. All applicable legal or institutional installation regulations must be complied with during installation.
- The device may only be opened by lifting the cover. It does not contain any parts that can be replaced or repaired by the user.
- The device contains electrical and electronic components and must not be disposed of as household refuse. All locally valid regulations and requirements must be observed.

Product features

Application

The VAV-Universal controller VRU-M1R-BAC is used for comfort applications as well as in sensitive working areas with contaminated media for room pressure applications.

Pressure measurement

The integrated M1R differential pressure sensor is suitable for detecting very small differential pressures. The maintenance-free sensor technology enables a wide range of applications in the HVAC comfort area such as offices, hotels, etc. and in sensitive working areas such as hospitals, clean rooms, etc.

Actuators

For the various applications and damper designs, various actuator variants with running times of 2.5...120 s are available.

Control functions

Room pressure control (RP) and room pressure cascade control (RPC), description see application library

Product features

Application room pressure control (RP)	Room pressure control (RP) for rooms with switchable or variable Δp value P'min...P'max via a continuous command variable (analogue or bus). Application A) – with non-critical room leakage rate Rooms with non-critical leakage rates / overflows, room pressure controller acting on supply or extract air dampers. Application B) – with low room leakage rate Rooms with low leakage rates / overflows, room pressure controller acting on bypass damper mounted parallel to the VAV unit. Description see application library P'nom Calibration parameters: 5...75 Pa P'max Maximum operating pressure, adjustable 20...100% of P'nom P'min Minimum operating pressure, adjustable 0...100% of P'nom Room pressure mode Switchable: negative / positive pressure via Belimo Assistant App or BACnet/Modbus
Application room pressure cascade control (RPC)	Room pressure cascade control (RPC) for rooms with low leakage rates / overflows acting on volumetric flow controller, with switchable or variable Δp value P'min...P'max via a continuous command variable (analogue or bus). P'nom Calibration parameters: 5...75 Pa P'max Maximum operating pressure, adjustable 20...100% of P'nom P'min Minimum operating pressure, adjustable 0...100% of P'nom Room pressure mode Switchable: negative / positive pressure via Belimo Assistant App or BACnet/Modbus
Demand Controlled Ventilation (DCV)	Output of the demand signal (damper position) to the higher-level automation system – DCV function.
Bus operation	Thanks to the multi-bus functionality of the VRU-...-BAC, the VAV universal controllers can be easily integrated into a bus system. The communication interface is defined on the system using Belimo Assistant 2: BACnet MS/TP, Modbus RTU, Belimo MP-Bus. A hybrid mode is optionally available for BACnet MS/TP and Modbus RTU, bus connection combined with analogue control. In bus mode, a sensor (0...10 V / passive) can optionally be connected, e.g. a temperature sensor or a switching contact, for integration into the higher-level bus system.
MP-Bus application Compatibility mode: Standard / VRP-M	Standard / VRP-M: The VRU-..-BAC is based on the new Belimo MP data pool model. If the VRU-..-BAC is used as a VRP-M replacement in an existing MP-Bus system, the VRU-..-BAC can be set to the VRP-M function with the compatibility mode parameter. See instructions: VAV-Universal - MP-Bus Existing system: Replace VRP-M with VRU-..-BAC.

Product features

Operating settings see application library

Operating settings Min/Max/Nom

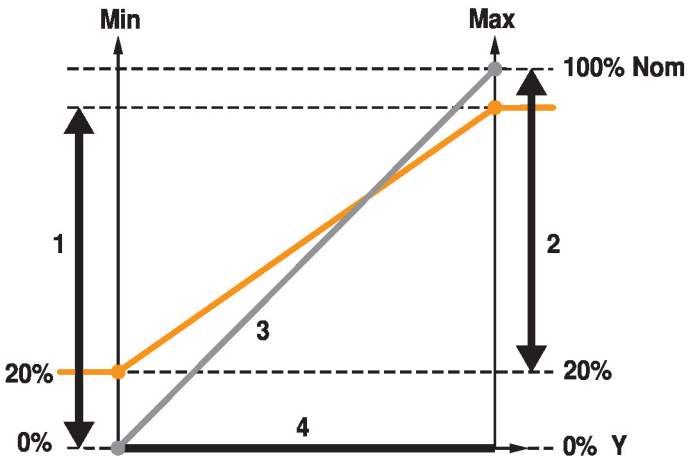

Nominal value (OEM setting) Nom
Adjustment range Min 1
Adjustment range Max 2
Feedback U 0...100% Nom 3
Control Y Min...Max 4

Operating and service tools Belimo Assistant 2

Accessories

Tools	Description	Type
	Service tool, with ZIP-USB function, for configurable and communicative Belimo actuators, VAV controller and HVAC performance devices	ZTH EU
	Service tool for wired and wireless setup, on-site operation and troubleshooting.	Belimo Assistant 2
	Belimo Assistant Link Bluetooth and USB to NFC and MP-Bus converter for configurable and communicative devices	LINK.10

Electrical accessories	Description	Type
	Blanking plug for VST connector plug, Multipack 25 pcs.	ZG-VRU01
	Complete functions ZIP-BT-NFC as of production date 2019-10-15	

Electrical installation

Supply from isolating transformer.

The wiring of the line for BACnet MS/TP / Modbus RTU is to be carried out in accordance with applicable RS-485 regulations.

Modbus / BACnet: Supply and communication are not galvanically isolated. COM and ground of the devices must be connected to each other.

AC/DC 24 V, modulating (VAV)

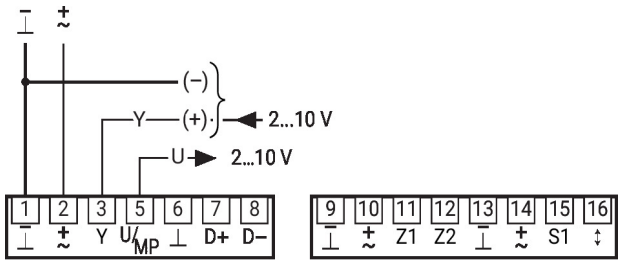

Priority rule - Analog VAV control
(a)
1. z1
2. z2
3. a) adaptation
   b) synchronisation
4. Y-modulating: min...max

(see override control z1/z2)

Override command 'damper CLOSE' over reference signal Y (in Mode 2...10 V):
<0.3 V = damper CLOSE
>0.3...2 V = V'min
2...10 V = V'min...V'max

Electrical installation

AC/DC 24 V, contactor step control (CAV)

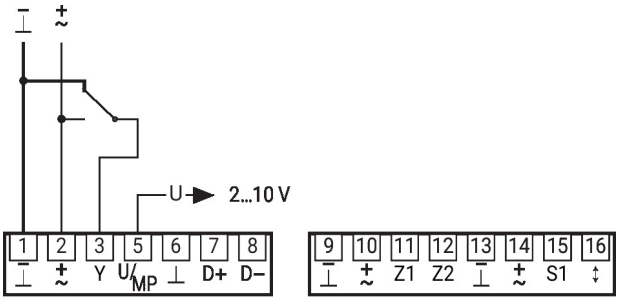

Priority rule - Analogue CAV step control (b)
1. z1
2. z2
3. a) adaptation
   b) synchronisation
4. Y-steps: CLOSE-MIN-MAX

(see override control z1/z2)

Contact 2-3 = MAX
3 uncoated = MIN
Contact 1-3 = CLOSE (mode 2...10 V)
MIN (mode 0...10 V)

AC/DC 24 V, override control z1/z2

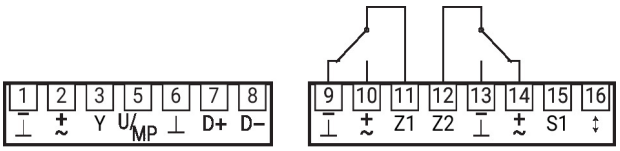

Override control z1
Contact 11-9 = Motor STOP
Contact 11-10 = Damper OPEN

Override control z2
Contact 12-13 = Damper CLOSED
Contact 12-14 = MAX

11/12 uncoated = priority rule a/b/c/d/e

Further electrical installations

Functions with specific parameters (NFC)

MP-Bus

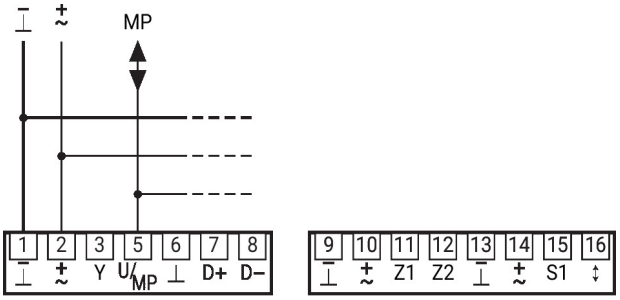

Priority rule MP-Bus control (c)
1. z1
2. z2
3. Bus watchdog
4. a) adaptation
   b) synchronisation
5. Y-step: actuator CLOSED / MIN / MAX
6. Bus override
7. Bus setpoint: min...max

Further electrical installations

Functions with specific parameters (NFC)

MP-Bus Network topology

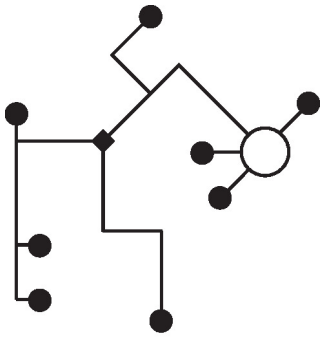

There are no restrictions for the network topology (star, ring, tree or mixed forms are permitted).
Supply and communication in one and the same 3-wire cable
• no shielding or twisting necessary
• no terminating resistors required

BACnet MS/TP / Modbus RTU with analogue setpoint (hybrid mode)

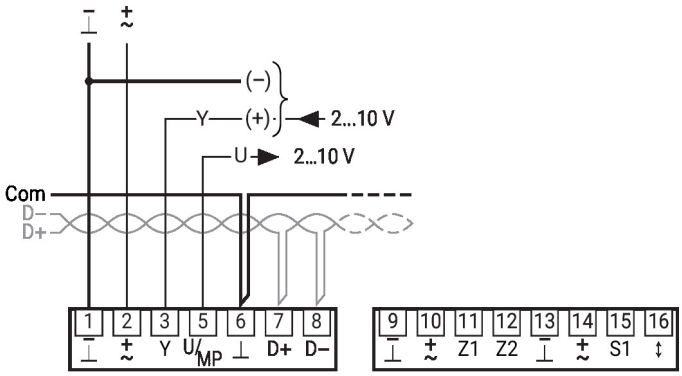

Priority rule BACnet/ Modbus hybrid mode (e)
1. z1
2. z2
3. Bus watchdog
4. a) adaptation
   b) synchronisation
5. Bus override
6. Y-step: actuator CLOSE / MIN / MAX
7. Bus setpoint: min...max

Connection passive sensor (bus operation)

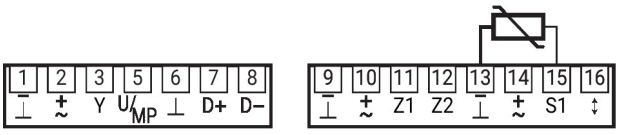

1)	2)
200 Ω...2 kΩ	0.5 Ω
2 kΩ...10 kΩ	2.7 Ω
10 kΩ...55 kΩ	14.7 Ω

1) Resistance range
2) Resolution
Compensation of the measured value is recommended
Suitable for Ni1000 and Pt1000
Corresponding Belimo sensors 01DT-..

Connection of active sensor (bus operation)

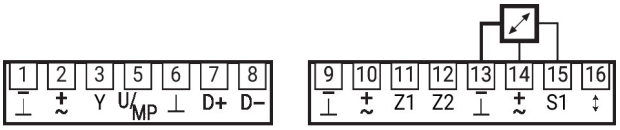

Example:
- Active temperature sensors
- Setpoint generator
- Humidity sensor

Connection switching contact (bus operation)

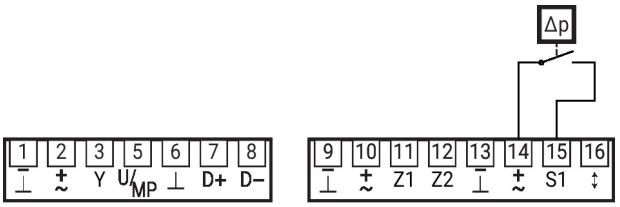

Requirements switching contact:
The switch must be capable of switching a current of 16 mA @ 24 V accurately.
Example:
- dP sensor
- window contact

Parameter and tool overview

Operating data

Parameter/Function	Unit/Value	Function/Description/(Area)	Application: Room pressure	Application: Room pressure cascade affecting VAV	Tool: Assistant app	Tool: PC-Tool	Tool: ZTH EU	Authorisation: Expert/OEM
Overview								
Position	String	Plant designation (64 Z./ZTH 10 Z.)	X	X	r	r	r	
Series number	xxxxx-xxxxx-xxx-xxx	Series number VRU	X		r	r	r	
Voltage source	24 V/–		X	X	r			
Type	VRU-M1R-BAC		X	X	r	r	r	
Application	Room pressure	Application setting	X		r	r	r	
Room-pressure cascade	OFF/ON/Quick ON	OFF ON: Function activated Quick ON: Activated with VAV fast running actuators	(X)	X X	r	r	r	
Designation	String	Model designation damper (OEM, 16 Z.)	X	X	r	r	–	
Setpoint	Δp: Pa (ZTH: %)	Show live data	X	X	X	X	X	
Actual value	Δp: Pa (ZTH: %)	Show live data	X	X	X	X	X	
Damper position	0…100%	Show live data	X		X	X	X	
Override control	Auto/min./max./nom OPEN/CLOSE/Motor stop	Temporary override function (Tool override)	X X	(X)	X	X		
Actuator	Adaption, synchronisation	Trigger adaption, synchronisation	X		X	X		E
Transmit setting data		System documentation	X	X	X	X		
Save setting data		Save setting in file	X	X		X		
Trend display	Setpoint, actual value, damper position	Commissioning, validation, service	X		X	X		
Trend display	Setpoint, actual value	Commissioning, validation, service		X	X	X		
Transmit trend data		Commissioning, validation, service	X	X		X		
Diagnosis – Evaluation	**Status**							
Actuator	OK/not connected/Gear disengaged/Actuator blocked/Setting range extended		X					
Sensor	OK/Δp sensor incorrectly connected/Measuring value outside measuring range/Δp sensor error		X	X				
Room pressure	OK/Setpoint not reached		X	X				
Bus	OK/Bus watchdog triggered		X	X				
Diagnosis – Installation	**Unit/Value**	**Function/Description/(Area)**						
Voltage source	24 V/de-energised		X	X	X			
Operating time	h	Device connected to supply	X	X	X	X		
Active time	h	Device in motion	X		X	X		
Software Version		VRU - Firmware Version	X	X	X	X		

Availability: VAV-Universal components incl. replacement devices are only available from manufacturers of VAV units (OEM).
Authorisations: [E – Expert Mode] – Functionally relevant settings are only accessible via the Expert Mode of the Belimo Assistant App.

Legend
X Application supports function/Parameter
r Tool: Read
w Tool: Write
– Tool: Does not support parameter
E Only visible in Expert Mode

Parameter and tool overview

Configuration

Parameter/Function	Unit/Value	Function/Description/(Area)	Application: Room pressure	Application: Room pressure cascade affecting VAV	Tool: Assistant app	Tool: PC-Tool	Tool: ZTH EU	Authorisation: Expert/OEM
VAV unit/Duct pressure control damper – manufacturer parameters (OEM values – not variable)								
Application	Room pressure	Application setting	X	X	r	r	r	O
Designation	Text string	Model designation damper (16 Z.)	X	X	r	r	–	O
P'nom	Pa	Nominal value Δp RP [5...75 Pa]	X	X	r	r	r	O
SN actuator	xxxxx-xxxxx-xxx-xxx	Actuator serial number	X		r	–	–	
Direction of rotation	ccw/cw	Actuator direction of rotation setting	X		r/w	r/w	–	E
Range of rotation	Adapted/programmed	Actuator adapted/programmed 30...95°	X		r/w	r/w	–	E
Power on behaviour	No action/Synch. / Adaption	Actuator power-on behaviour	X		r/w	r/w	–	E
NFC interface	ON/OFF	NFC communication for app access	X	X		r	–	O
Configuration – Project specific settings								
Position	Text string	Plant designation (64 Z./ZTH 16 Z.)	X	X	r/w	r/w	r	
max.	Pa (ZTH: %)	Δp step max. >P'min...100% P'nom	X	X	r/w	r/w	r/w	
min.	Pa (ZTH: %)	Δp step min. >0...100% P'nom	X	X	r/w	r/w	r/w	
Room-pressure mode	Overpressure/Negative pressure	Room operating mode aseptic (+)/ septic (-)	X	X	r/w	r/w	–	E
Application area	Extract air/Supply air	Mounting location for – Control butterfly valve or – Room pressure cascade: VAV unit with Cascade signal (secondary controller)	X	X	r/w	r/w	–	E
Room-pressure cascade	OFF/ON/Quick ON	in connection with the room-pressure cascade ON: Function activated Quick ON: Activated with VAV fast runner	(X)	X X	r/w	r/w	–	E
Setpoint	Analogue/Bus	Analogue and hybrid mode/Bus	X	X	r/w	r/w	–	E
Reference signal Y	2...10 V/0...10 V/adjustable	Control setting	X	X	r/w	r/w	–	E
Feedback type	Δp/Position	Δp/Damper position	X		r/w	r/w	–	E
Feedback U	2...10 V/0...10 V/adjustable	Setting U signal	X		r/w	r/w	–	E

Availability: VAV-Universal components incl. replacement devices are only available from manufacturers of VAV units (OEM).
Authorisations: [E – Expert Mode] – Functionally relevant settings are only accessible via the Expert Mode of the Belimo Assistant App.

Legend
X Application supports function/Parameter
r Tool: Read
w Tool: Write
– Tool: Does not support parameter
E Only visible in Expert Mode

Parameter and tool overview

Bus parameter

Parameter/Function	Unit/Value	Function/Description/(Area)	Application: Room pressure	Application: Room pressure cascade affecting VAV	Tool: Assistant app	Tool: PC-Tool	Tool: ZTH EU	Authorisation: Expert/OEM
Configuration – Communication								
Bus protocol	BACnet MS/TP/Modbus/MP [2]		X X	X –	r	r	r	E
Bus protocol	BACnet MS/TP							
MAC address	0...127		X	X	r/w	r/w	–	E
Baud rate	9600/.../115200		X	X	r/w	r/w	–	E
Terminating resistor	OFF/ON		X	X	r/w	r/w	–	E
Instance number	0...4194304		X	X	r/w	r/w	–	E
Device name	VAV-Universal	(32 Z.)	X	X	r/w	r/w	–	E
Max. master	0...127		X	X	r/w	r/w	–	E
Bus protocol	Modbus RTU							
Address	1...247		X	X	r/w	r/w	–	E
Baud rate	9600/.../115200		X	X	r/w	r/w	–	E
Terminating resistor	OFF/ON		X	X	r/w	r/w	–	E
Parity	1-8-N-2/...E-1/...-0-1/...-N-1		X	X	r/w	r/w	–	E
Bus protocol	MP-Bus [2]							
MP address	PP/MP1...8 PP	PP (MP OFF)/MP1...8 PP (MP OFF)	X	X	r/w	r/w	–	E
Bus fail position	0%	0...100% (min...max)	X	–	r/w	–	–	E
Compatibility mode	Default/VRP-M [1]	Default: Belimo MP datapool device VRP-M: VRP-M replacement in existing MP system [1]	X	–	r/w	r/w	–	E

Note:
[1] Refer to instructions: VAV-Universal – MP-Bus existing system: Replace VRP-M with VRU-...-BAC
[2] In the room pressure cascade application, the room pressure controller can not be integrated in the MP-Bus system. MP address setting: PP!

Authorisations:
[O – Restricted Mode] – These settings can only be changed with a Retrofit release code.
[E – Expert Mode] – Functionally relevant settings are only accessible via the Expert Mode of the Belimo Assistant App.

Legend:
X Application supports function/Parameter
r Tool: Read
w Tool: Write
– Tool: Does not support parameter
O Write permission only with Retrofit release code
E Only visible in Expert Mode

Operating controls and indicators

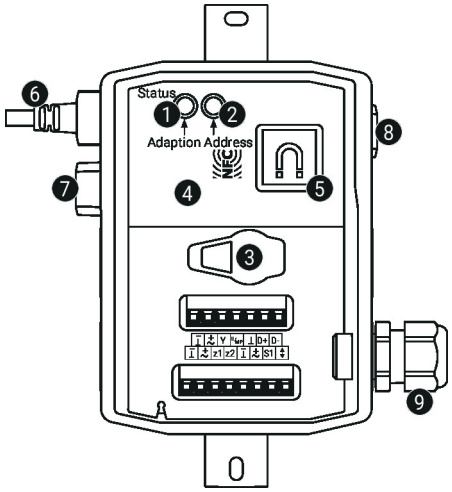

1. **Push-button and LED display green**

On:	In operation (Power ok)
Flashing:	Pending status information Belimo Assistant 2
Press button:	Triggers angle-of-rotation adaptation, followed by standard mode

2. **Push-button and LED display yellow**

Flashing:	MP addressing
Press button:	Confirmation of the addressing

3. **Service plug**
For connecting configuration and service tools

4. **NFC interface**
Belimo Assistant 2, over NFC interface (Android) or with ZIP-BT-NFC converter for bluetooth connection (iOS and Android Phone)

5. **Mounting plate**
For ZIP-BT-NFC (magnet)

6. **Connection (I) (M)**
For ..-VST actuator

7. **Blind plug (II)**

8. **Connection Δp sensor**
6 mm (tube inside diameter 5 mm)

9. **Cable gland M16** (tightening torque 3 Nm)

Installation notes

Installation situation

Mounting VAV-Universal control equipment:

The VAV-Universal set is assembled on the VAV unit in the factory by the VAV unit manufacturer, the actuator is connected to the VRU controller, set and calibrated.

Installation of the VAV unit:

The VAV unit must be installed according to the specifications of the VAV unit manufacturer.

Installation specification Δp sensor:

No restrictions, but it must be avoided that any condensation can run into the sensor and remain there.

Accessibility of control equipment:

Accessibility to the control equipment must be guaranteed at all times.

Cable gland M16x1.5, cable diameter 5...10 mm

Depending on the connection situation, the cable gland can be inserted in one of the M16x1.5 openings.

Application without actuator:

The unused connection socket (I)(M) can be sealed with a blanking plug ZG-VRU01, available as an accessory.

Replacing the actuator:

If the VST actuator is replaced during operation, the 24 V supply to the VRU controller must be briefly interrupted. This causes the corresponding actuator driver to be read in.

Pressure tube connections:

The pressure tube connections must not come into contact with liquids or greasing agents of any kind, this includes any residue inside or on the surface of the pressure tubes.

Installation notes

Disconnect actuator

The connecting cable of the VST damper actuator can be removed from the VRU controller using a screwdriver (size 0...3) as shown in the illustration.

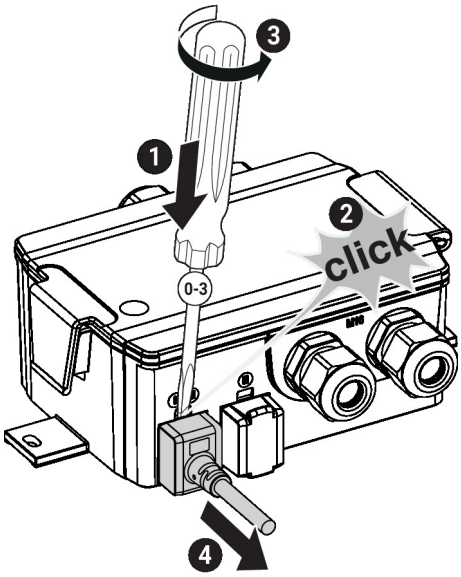

Connect actuator

To ensure IP protection and the electrical connection, the VST plug must be fully inserted into the connector socket. For this, a certain amount of force is required.

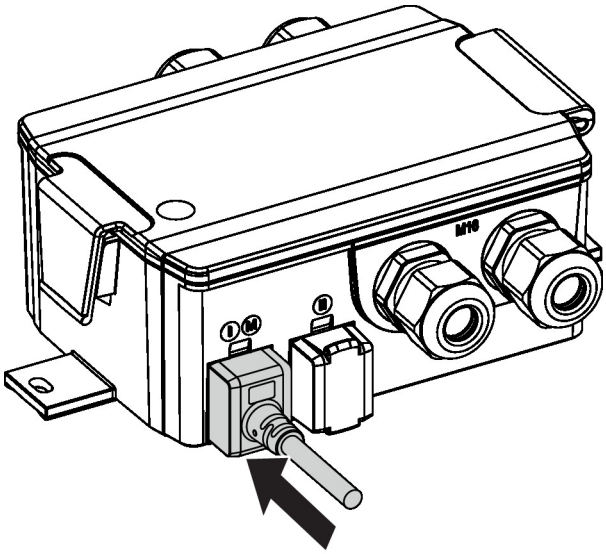

Servicing

Cleaning work during installation, commissioning or maintenance

Belimo VAV devices are maintenance-free. We recommend dry removal of dust from the outside of the housing if necessary.

The duct system and the VAV units are maintained on the occasion of the cleaning intervals required by law or by the specific system. Please observe the following points.

Cleaning work on the damper, differential pressure pickup devices and pressure tubes

When cleaning the duct system or the VAV unit, remove the pressure tubes on the VAV controller so that it will not be affected.

Using compressed air, e.g. blowing out the differential pressure pickup devices or pressure tubes

Before doing this work, disconnect the differential pressure pickup devices or pressure tubes from the differential pressure sensor.

Connecting the pressure tubes

To ensure the correct installation of the pressure tubes, we recommend marking them with + or – before disassembly.

Service

Wireless connection

Belimo devices marked with the NFC logo can be operated with Belimo Assistant 2.

Requirement:

- NFC- or Bluetooth-capable smartphone
- Belimo Assistant 2 (Google Play and Apple App Store)

Align NFC-capable smartphone on the device so that both NFC antennas are superposed.

Connect Bluetooth-enabled smartphone via the Bluetooth-to-NFC converter ZIP-BT-NFC to the device. Technical data and operating instructions are shown in the ZIP-BT-NFC data sheet.

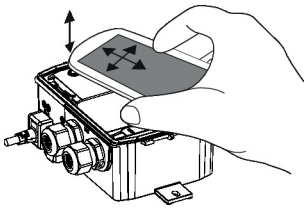

Converter ZIP-BT-NFC

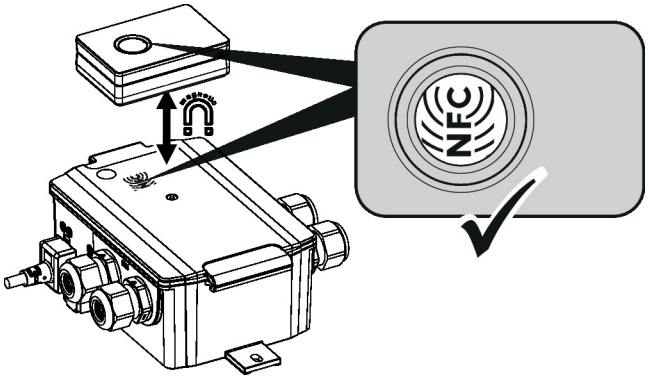

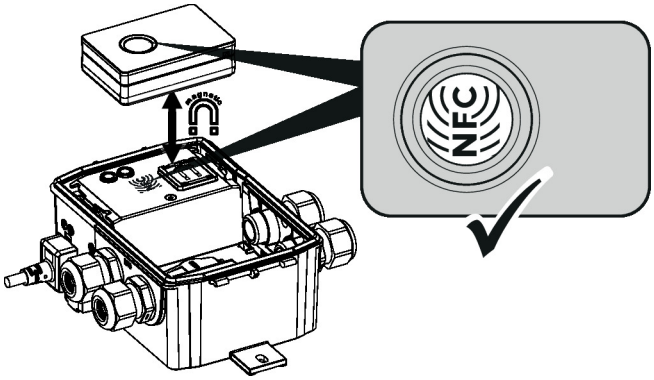

Service

Wired connection The device can be configured by ZTH EU via the service socket or by Belimo Assistant 2 via NFC

blue = X
white = Com
green = MP

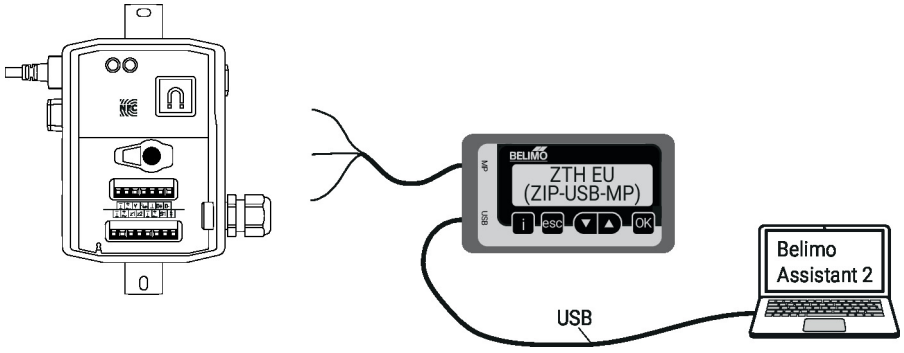

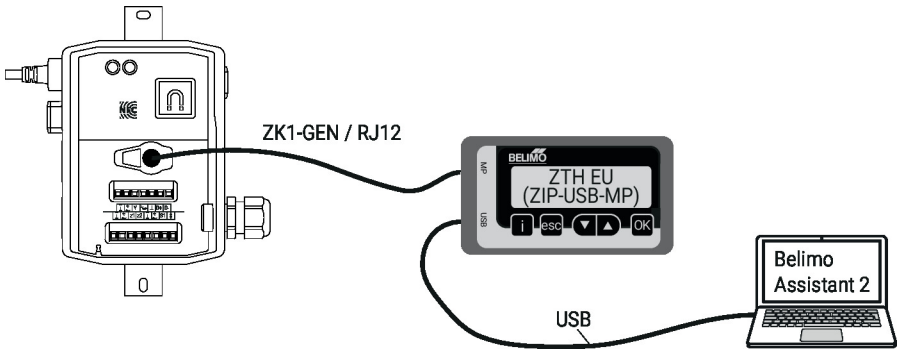

Dimensions

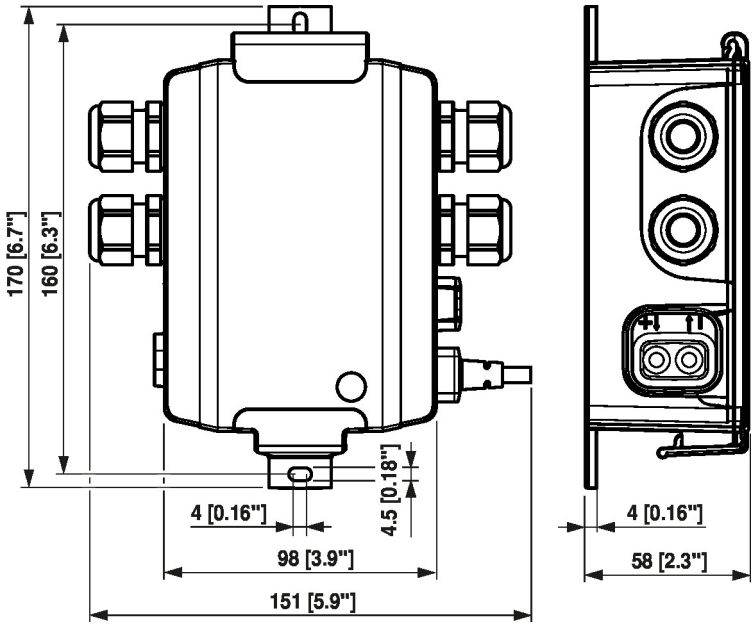

Further documentation

- Volumetric flow and pressure control from Belimo, product range overview
- Data sheets for VST-actuators
- VAV-Universal application description
- Tool connections
- Modbus Interface description
- Description Data-Pool Values
- BACnet Interface description
- Introduction to MP-Bus Technology
- Overview MP Cooperation Partners
- Quick Guide – Belimo Assistant 2