Contact sensor Humidity / Temperature

Active contact sensor (0...10 V) for measuring the relative or absolute humidity and temperature on pipe surfaces. Instead of the humidity signal, the enthalpy or the dew point can be selected as an output signal. IP65 / NEMA 4X rated housing.

5 YEAR WARRANTY

Type Overview

Type	Output signal active humidity	Output signal active temperature	Cable length
22HTH-110X	0...5 V, 0...10 V	0...5 V, 0...10 V	2 m

Technical data

Electrical data	Nominal voltage	AC/DC 24 V
	Nominal voltage range	AC 21.6...26.4 V / DC 13.5...26.4 V
	Power consumption AC	0.8 VA
	Power consumption DC	0.4 W
	Electrical connection	Pluggable spring loaded terminal block max. 2.5 mm²
	Cable entry	Cable gland with strain relief ø6...8 mm
Functional data	Medium	Air Water
Measuring data	Measured values	Relative humidity Absolute humidity Dew point Enthalpies Temperature
Specification temperature active	Sensing element technology	Polymer-based capacitive sensor with plastic cap and filter membrane
	Measuring range temperature settings	Active sensor: range selectable Attention: The maximum measuring range listed does not indicate the allowable fluid temperature for the sensor. Refer to safety data for the maximum fluid temperature limits. Setting / Range [°C] / Range [°F] / Factory setting S0 / -40...60 / -40...160 S1 / 0...50 / 40...140 S2 / -15...35 / 0...100 S3 / -20...80 / 0...200 ✓
	Accuracy temperature	±0.3°C @ 25°C [±0.5°F @ 77°F]
	Long term stability	±0.05°C p.a. @ 21°C [±0.09°F p.a. @ 70°F]
	Time constant τ (63%) in the room	Typical 143 s
Specification Humidity	Sensing element technology	Polymer-based capacitive sensor with plastic cap and filter membrane
	Measuring range	0...100% RH

Technical data

Specification Humidity	Measuring range absolute humidity	adjustable at the transducer: 0...50 g/m³ (default setting) 0...80 g/m³
	Measuring range enthalpy	0...85 kJ/kg
	Measuring range dew point	adjustable at the transducer: 0...50°C [40...140°F] (default setting) -20...80°C [0...200°F]
	Accuracy	±2% between 20...80% RH @ 25°C
	Long term stability	±0.3% RH p.a. @ 21°C @ 50% RH
	Time constant τ (63%) in the room	Typical 10 s
Safety data	Protection class IEC/EN	III, Protective Extra-Low Voltage (PELV)
	Degree of protection IEC/EN	IP65
	Degree of protection NEMA/UL	NEMA 4X
	EU Conformity	CE Marking
	Certification IEC/EN	IEC/EN 60730-1
	Quality Standard	ISO 9001
	Type of action	Type 1
	Rated impulse voltage supply	0.8 kV
	Pollution degree	3
	Ambient humidity	Max. 95% RH, non-condensing
	Ambient temperature	-20...50°C [-4...122°F]
	Fluid temperature	-20...60°C [-4...140°F]
Materials	Housing	Cover: PC, orange Bottom: PC, orange Seal: NBR70, black UV resistant
	Cable gland	PA6, black

Safety notes

This device has been designed for use in stationary heating, ventilation and air-conditioning systems and must not be used outside the specified field of application. Unauthorised modifications are prohibited. The product must not be used in relation with any equipment that in case of a failure may threaten humans, animals or assets.

Ensure all power is disconnected before installing. Do not connect to live/operating equipment.

Only authorised specialists may carry out installation. All applicable legal or institutional installation regulations must be complied with during installation.

The device contains electrical and electronic components and must not be disposed of as household refuse. All locally valid regulations and requirements must be observed.

Remarks

General remarks concerning sensors

Sensing devices with a transducer should always be operated in the middle of the measuring range to avoid deviations at the measuring end points. The ambient temperature of transducer electronics should be kept constant. The transducers must be operated at a constant supply voltage (±0.2 V). When switching the supply voltage on/off, onsite power surges must be avoided.

Remark: Occurring draft leads to a better carrying-off of dissipative power at the sensor. Thus temporally limited fluctuations might occur upon temperature measurement.

Remarks

Remark surface measurements

When measuring temperature, humidity or condensation on a surface, both the temperature of the surface and that of the ambient air influence the measurement result. When measuring on a pipe surface, the influence of the ambient air can be minimised by using thermal contact fluid.

Application notice for humidity sensors

The humidity sensor is extremely sensitive. Touching the sensor element or exposing it to aggressive substances like chlorine, ozone, ammonia, hydrogen peroxide or ethanol (i.e. as a cleaning agent) may affect the measurement accuracy.

Long term operation outside the recommended conditions (5...60°C and 20...80% RH) can result in a temporary offset. After returning into the recommended range, this effect disappears.

Accessories

Optional accessories

Description	Type
Connection adapter flex conduit, M20x1.5, for cable gland 1x 6 mm, Multipack 10 pcs.	A-22G-A01.1

Wiring diagram

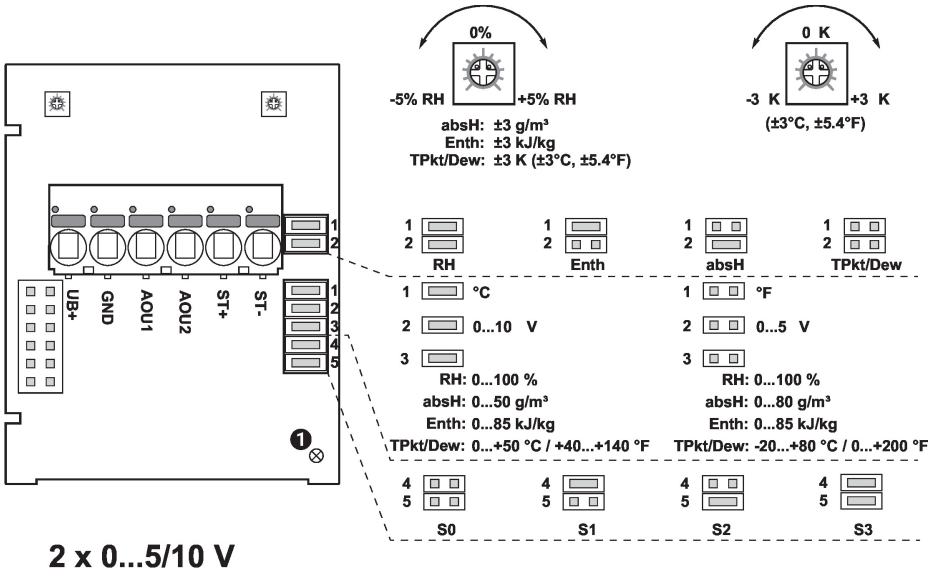

2 x 0...5/10 V

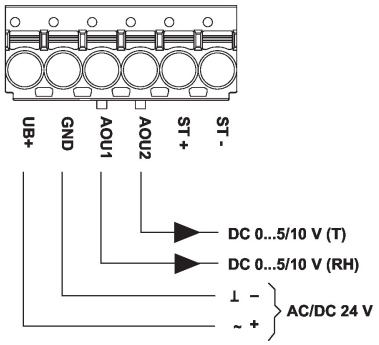

① Status LED
Slow blinking (0.5 Hz): Ok
Fast blinking (4 Hz): Failure

RH	Relative humidity
absH	Absolute humidity
EntH	Enthalpy
TPkt/Dew	Dew point
	(Measured value available on output AOU1)

Setting	Range [°C]	Range [°F]	Factory setting
S0	-40...60	-40...160	
S1	0...50	40...140	
S2	-15...35	0...100	
S3	-20...80	0...200	✓

Dimensions

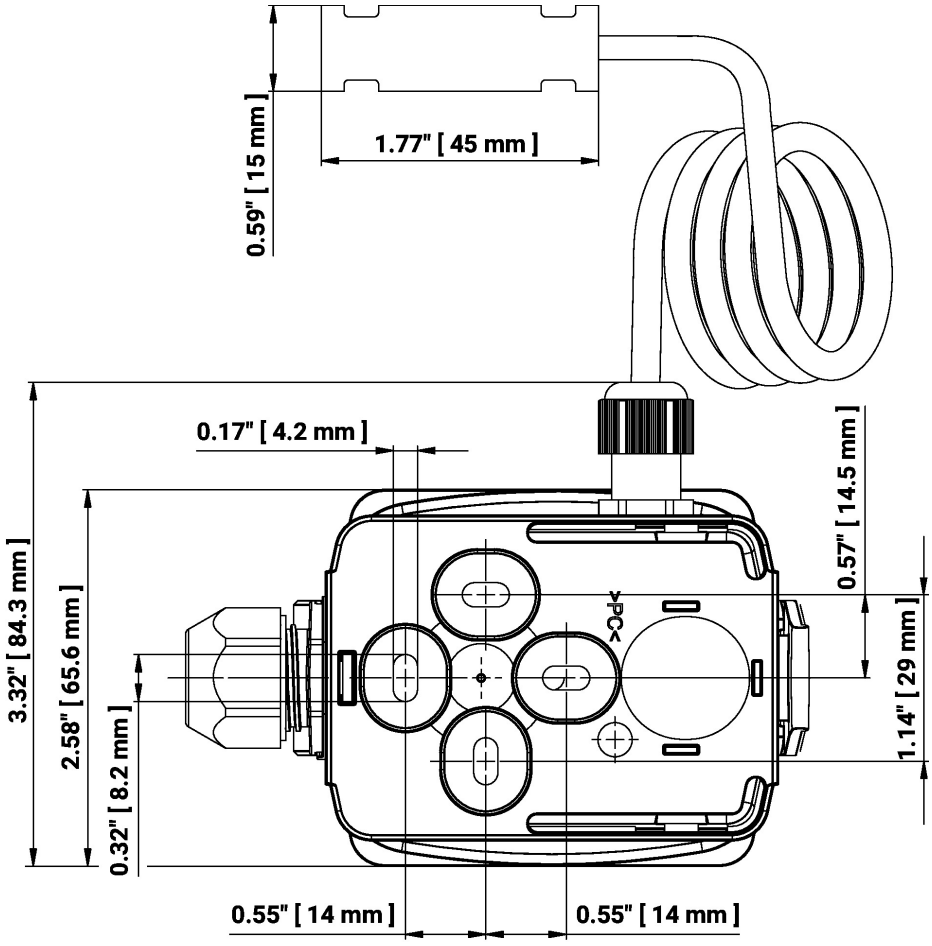

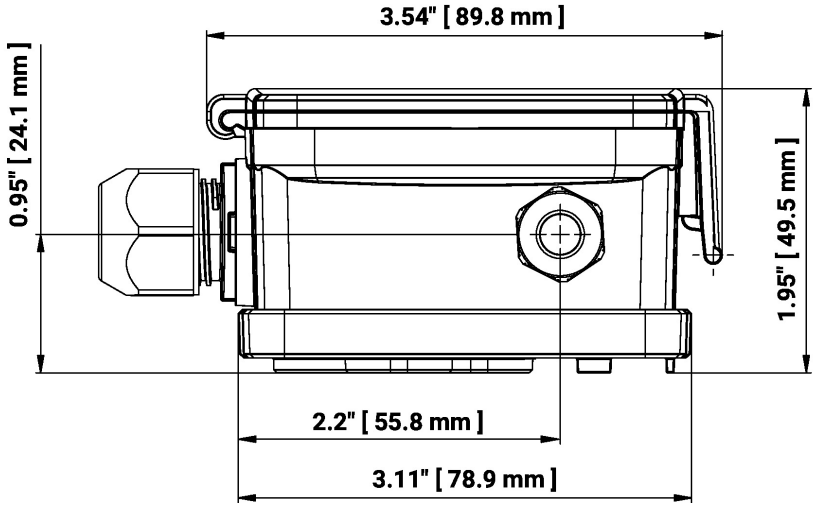

Type	Cable length	Weight
22HTH-110X	2 m	-

Further documentation

- Installation instructions