Characterised control valve with sensor-operated flow control, 6-way, Internal thread, PN 16 (EPIV)

- Nominal voltage AC/DC 24 V
- Control modulating, communicative, hybrid
- Two sequences (cooling/heating) with one 90° rotary actuator
- Switching or modulating control on the water side of thermal heating/cooling elements
- For closed water systems
- Communication via BACnet MS/TP, Modbus RTU, Belimo-MP-Bus or conventional control

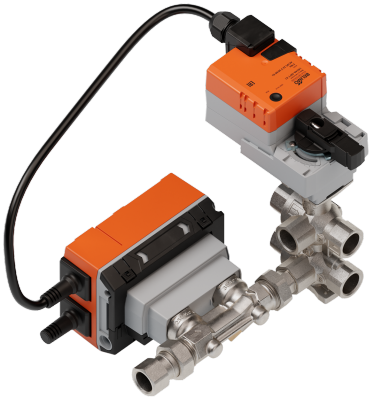

Picture may differ from product

Type Overview

Type	DN	Rp ["]	V'nom [l/h]	V'max low-n [l/h]	V'nom [m³/h]	Kvs theor. [m³/h]	PN
EP015R6+BAC	15	1/2	1500	1060	1.5	1.6	16
EP020R6+BAC	20	3/4	2500	1760	2.5	3.5	16
EP025R6+BAC	25	1	3500	2470	3.5	5.5	16

Kvs theor.: theoretical Kvs value for pressure drop calculation

V'max low-n: V'max for low-noise operation

<35 dB(A) (up to a differential pressure of 50 kPa)

Technical data

Electrical data	Nominal voltage	AC/DC 24 V
	Nominal voltage frequency	50/60 Hz
	Nominal voltage range	AC 19.2...28.8 V / DC 21.6...28.8 V
	Power consumption in operation	4 W (DN 15...20) 4.5 W (DN 25)
	Power consumption in rest position	3.7 W
	Power consumption for wire sizing	6.5 VA (DN 15...20) 8.5 VA (DN 25)
	Connection supply / control	Cable 1 m, 6x 0.75 mm²
	Parallel operation	Yes (note the performance data)
Data bus communication	Communicative control	BACnet MS/TP Modbus RTU MP-Bus
	Number of nodes	BACnet / Modbus see interface description MP-Bus max. 8
Functional data	Operating range Y	2...10 V
	Operating range Y variable	0.5...10 V
	Position feedback U	2...10 V
	Position feedback U note	Max. 1 mA
	Position feedback U variable	0...10 V 0.5...10 V
	Sound power level motor	35 dB(A)
	V'max adjustable	4.2...100% of V'nom
	Control accuracy	±5% (of 25...100% V'nom)
	Control accuracy note	±10% (of 25...100% V'nom) @ Glycol 0...60% vol.
	Fluid	Water, water with glycol up to max. 60% vol.
	Fluid temperature	6...80°C [43...176°F]
	Close-off pressure	Δps 350 kPa

Technical data

Functional data	Differential pressure	Δpmax 110 kPa
	Flow characteristic	linear
	Leakage rate	air-bubble tight, leakage rate A (EN 12266-1)
	Pipe connection	Internal thread according to ISO 7-1
	Installation orientation	upright to horizontal (in relation to the spindle)
	Servicing	maintenance-free
	Manual override	with push-button, can be locked
Temperature measurement	Measuring accuracy absolute temperature	±0.35°C @ 10°C [±0.65°F @ 50°F] (Pt1000 EN60751 Class B) ±0.6°C @ 60°C [±1.1°F @ 140°F] (Pt1000 EN60751 Class B)
Flow measurement	Measuring principle	Ultrasonic flow measurement
	Measuring accuracy flow	±2%, according to class 2 EN 1434, glycol 0% vol.
	Measuring accuracy flow note	±5% (of 20...100% V'nom) @ glycol 0...60% vol.
	Min. flow measurement	0.2% of V'nom
Glycol monitoring	Measurement display glycol	0...60%
	Measuring accuracy glycol monitoring	±4%
Safety data	Protection class IEC/EN	III, Protective Extra-Low Voltage (PELV)
	Degree of protection IEC/EN	IP54
	Pressure equipment directive	CE according to 2014/68/EU
	EMC	CE according to 2014/30/EU
	Type of action	Type 1
	Rated impulse voltage supply / control	0.8 kV
	Pollution degree	3
	Ambient humidity	Max. 95% RH, non-condensing
	Ambient temperature	-30...55°C [-22...131°F]
	Storage temperature	-40...80°C [-40...176°F]
Materials	Valve body	Nickel-plated brass body
	Flow measuring pipe	Nickel-plated brass body
	Closing element	chrome-plated brass
	Spindle	nickel-plated brass
	Spindle seal	EPDM O-ring
	Seat	PTFE, O-ring EPDM

Safety notes

- This device has been designed for use in stationary heating, ventilation and air-conditioning systems and must not be used outside the specified field of application, especially in aircraft or in any other airborne means of transport.
- Only authorised specialists may carry out installation. All applicable legal or institutional installation regulations must be complied with during installation.
- The device contains electrical and electronic components and must not be disposed of as household refuse. All locally valid regulations and requirements must be observed.

Product features

Operating mode

The HVAC performance device consists of three components: 6-way characterised control valve, measuring pipe with flow sensor and the actuator itself. The set maximum flow rates for sequence 1 (V'max1) and sequence 2 (V'max2) are assigned to the control signal as follows:

- 2 V/0% = 100% for sequence 1
- 10 V/100% = 100% for sequence 2

The performance device can be controlled communicatively or by an analogue signal. The fluid is detected by the sensor in the measuring pipe and is applied as the flow value. The measured value is balanced with the setpoint. The actuator corrects the deviation by changing the valve position.

Calibration certificate

There is a calibration certificate available in the Belimo Cloud for each device. If needed, it can be downloaded as a PDF through Belimo Assistant 2.

Control characteristics

The specially configured control parameters in connection with the precise velocity sensor ensure a stable quality of control.

V'nom is the maximum possible flow (V'nom=V'nom1=V'nom2).

V'max1 is the maximum flow rate which has been set with the smallest control signal, 2 V.

V'max2 is the maximum flow rate which has been set with the highest control signal, 10 V.

V'max1 and V'max2 can be adjusted 4.2...100% of V'nom.

V'min 0% (non-variable).

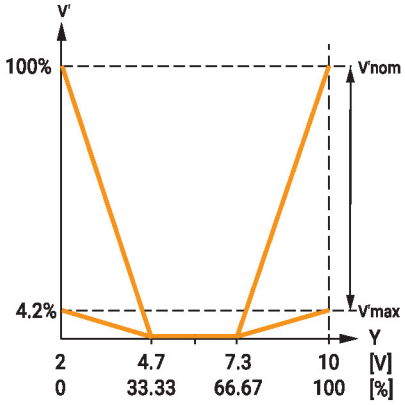

Product features

Setpoint control modes

Single setpoint

In the single setpoint mode, one setpoint is used to control the entire range of valve movement.

The valve operates based on the control mode selected:

Position control: The valve position corresponds directly to the single setpoint input.

Flow control: The flow is calculated based on the setpoint's position along the operating range.

Separate setpoints

In the separate setpoints mode, two distinct setpoints are used for independent control of two sequences:

Setpoint 1 controls sequence 1 (e.g., cooling).

Setpoint 2 controls sequence 2 (e.g., heating).

The control mode adjusts within each sequence:

Position control: Each setpoint determines the valve's position within its respective sequence range.

Flow control: The flow is calculated directly for each sequence, based on its corresponding setpoint.

Examples:

In the single setpoint mode, if the setpoint is 80%, the system calculates flow or adjusts the valve position for the entire range.

In the separate setpoints mode, if setpoint 1 (cooling) is set to 80%, setpoint 2 (heating) must be set to 0%. The same applies if setpoint 2 is set to 80%, for example, then setpoint 1 must be set to 0% accordingly. If both setpoints are >0% at the same time, the valve closes.

Creep flow suppression

Given the very low flow speed in the opening point, this can no longer be measured by the sensor within the required tolerance. This range is overridden electronically.

Opening sequence

The valve remains closed until the flow required by the control signal Y corresponds to 1% of V'nom. The control along the valve characteristic curve is active after this value has been exceeded.

Closing sequence

The control along the valve characteristic curve is active up to the required flow rate of 1% of V'nom. Once the level falls below this value, the flow rate is maintained at 1% of V'nom. If the level falls below the flow rate of 0.5% of V'nom required by the reference variable Y, then the valve will close.

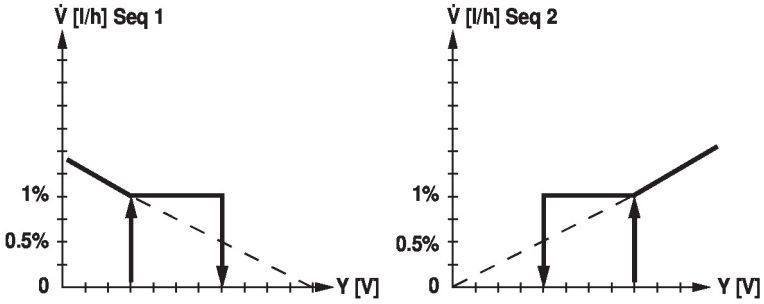

Converter for sensors

Connection option for a sensor (active or with switching contact). In this way, the analogue sensor signal can be easily digitised and transferred to the bus systems BACnet, Modbus or MP-Bus.

Configurable device

The factory settings cover the most common applications.

Belimo Assistant 2 is required for configuration via Near Field Communication (NFC) and simplifies commissioning. Moreover, Belimo Assistant 2 provides a variety of diagnostic options.

Product features

Hydronic balancing
With Belimo Assistant 2, the maximum flow rates of sequence 1 and sequence 2 can be adjusted individually on-site in a few simple reliable steps.

Combination analogue - communicative (hybrid mode)
With conventional control by means of an analogue control signal, BACnet or Modbus can be used for the communicative position feedback.

Error readout with analogue feedback signal
If the sensor cannot measure the flow due to a sensor error, this is indicated by 0.3 V at the position feedback U. This is only the case if the analogue position feedback U is set to flow and the lower value of the signal range is 0.5 V or more.

Manual override
Manual override with push-button possible (the gear train is disengaged for as long as the button is pressed or remains locked).

High functional safety
The actuator is overload protected, requires no limit switches and automatically stops when the end stop is reached.

Feedback signal
Regardless of the selected control mode, the following options are available for the feedback signal U5:

- Valve position
- Flow rate (0...V'nom, maximum value adjustable 25...100% of V'nom)
- Fluid temperature range (-20...120°C)

Pressure compensation
In cases of combined heating/cooling control elements, the fluid remains in the control element when in the closed position (no heating or cooling). The pressure of the enclosed fluid can rise or fall due to changes in fluid temperature caused by the ambient temperature. The 6-way characterised control valves have an integrated pressure relief function for the purpose of compensating for such pressure changes.

The pressure relief function is active in the closed position (45°) of the valve; reliable separation of sequences 1 and 2 continues. For additional information, consult the notes for project planning for the 6-way characterised control valve.

Parts included

Description	Type
Pipe connector for EPIV / Energy valve with external thread DN 15 Rp 1/2", G 3/4"	ZREV15F
Pipe connector for EPIV / Energy valve with external thread DN 20 Rp 3/4", G 1"	ZREV20F
Pipe connector for EPIV / Energy valve with external thread DN 25 Rp 1", G 1 1/4"	ZREV25F

Accessories

Tools

Description	Type
Service tool for wired and wireless setup, on-site operation and troubleshooting.	Belimo Assistant 2
Belimo Assistant Link Bluetooth and USB to NFC and MP-Bus converter for configurable and communicative devices	LINK.10

Mechanical accessories

Description	Type
Elbow 90° male/female DN 15 Rp 1/2", R 1/2", Set of 2 pcs.	P2P15PE-1GE
Elbow 90° male/female DN 20 Rp 3/4", R 3/4", Set of 2 pcs.	P2P20PF-1GE
Elbow 90° male/female DN 25 Rp 1", R 1", Set of 2 pcs.	P2P25PE-1GE
Fixing bracket for 6-way valve DN 15/20	ZR-004
Fixing bracket for 6-way valve DN 25	ZR-005
Pipe connector for ball valve with internal thread DN 15 Rp 1/2"	ZR2315
Pipe connector for ball valve with internal thread DN 20 Rp 3/4"	ZR2320
Pipe connector for ball valve with internal thread DN 25 Rp 1"	ZR2325

Sensors

Description	Type
Condensation switch	22HH-10
Condensation switch Cable length 2 m	22HH-100X
Contact sensor Humidity / Temperature Cable length 2 m	22HTH-110X

Electrical installation

Supply from isolating transformer.

Parallel connection of other actuators possible. Observe the performance data.

The wiring of the line for BACnet MS/TP / Modbus RTU is to be carried out in accordance with applicable RS-485 regulations.

Modbus / BACnet: Supply and communication are not galvanically isolated. COM and ground of the devices must be connected to each other.

Sensor connection: An additional sensor can optionally be connected to the flow sensor. This can be an active sensor with output DC 0...10 V (max. DC 0...32 V with resolution 30 mV) or a switching contact (switching current min. 16 mA @ 24 V). Thus the analogue signal of the sensor can be easily digitised with the flow sensor and transferred to the corresponding bus system.

Analogue output: An analogue output (wire 5) is available on the flow sensor. It can be selected as 0...10 V, 0.5...10 V, 2...10 V or user defined. For example, the flow rate or the temperature of the temperature sensor (Pt1000 - EN 60751, 2-wire technology) can be output as an analogue value.

Wire colours:
1 = black
2 = red
3 = white
5 = orange
6 = pink
7 = grey

Functions:
C1 = D- (wire 6)
C2 = D+ (wire 7)

AC/DC 24 V, modulating

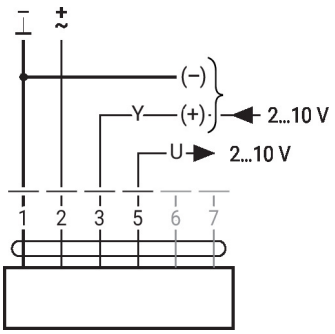

Modbus RTU / BACnet MS/TP with analogue setpoint (hybrid operation)

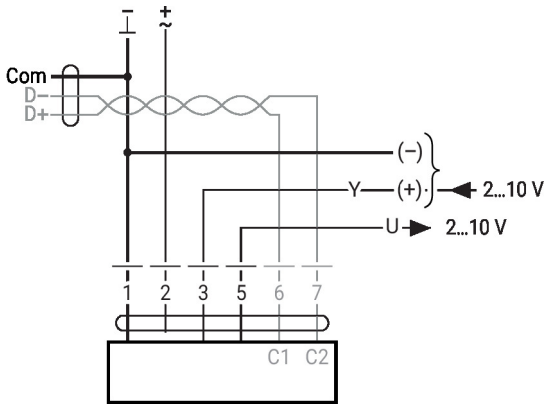

BACnet MS/TP / Modbus RTU

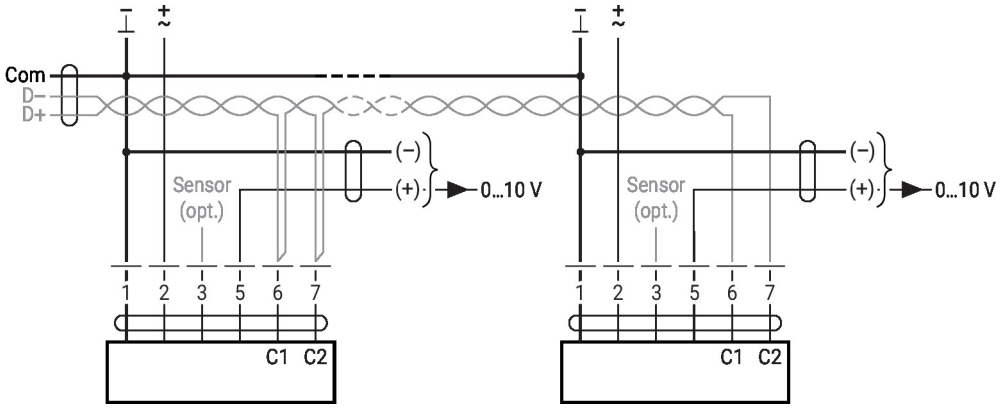

Electrical installation

MP-Bus

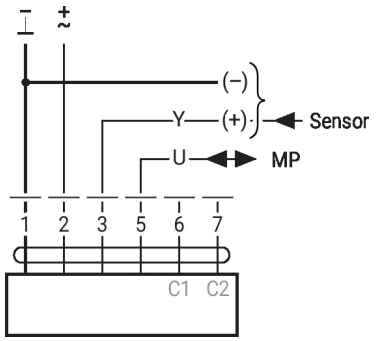

Converter for sensors

Connection with switching contact, e.g. differential pressure switch

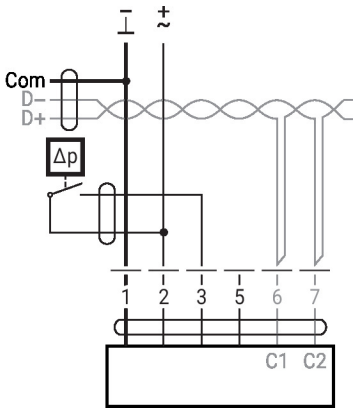

Switching contact requirements:
The switching contact must be able to switch a current of 16 mA at 24 V accurately.

Connection with active sensor, e.g. 0...10 V @ 0...50°C

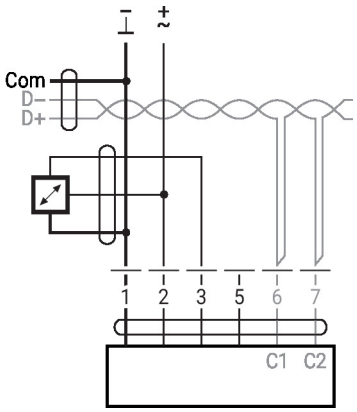

Possible voltage range: 0...32 V
Resolution 30 mV

Further electrical installations

Functions with specific parameters (configuration necessary)

Override control and limiting with AC 24 V with relay contacts

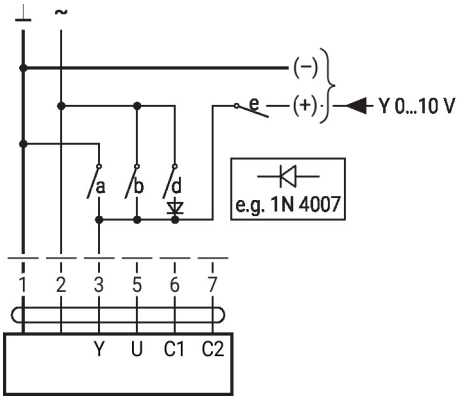

1	2	a	b	d	e	
						Open S1[1)]
						V'_{max} S1[2)]
						Open S2[1)]
						V'_{max} S2[2)]
						Close
						Y

1) Position control
2) Flow control
S1 Sequence 1
S2 Sequence 2

Override control and limiting with DC 24 V with relay contacts (with conventional control or hybrid mode)

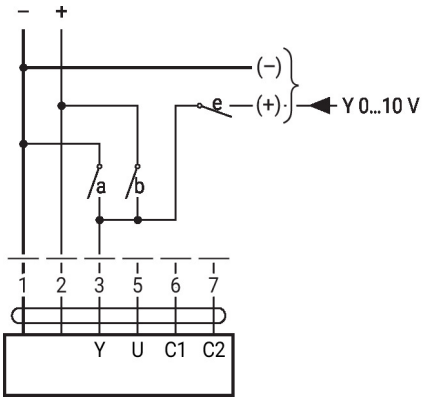

1	2	a	b	e	
					Open S1[1)]
					V'_{max} S1[2)]
					Open S2[1)]
					V'_{max} S2[2)]
					Close
					Y

1) Position control
2) Flow control
S1 Sequence 1
S2 Sequence 2

Control 3-point with AC 24 V

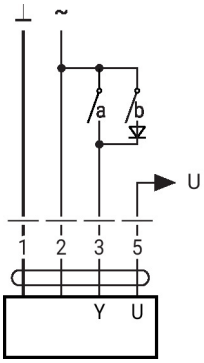

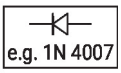

1	2	3 (a)	3 (b)	
				stop

Position control: 90° = 100 s
Flow control: Vmax = 100 s

Further electrical installations

Functions with specific parameters (configuration necessary)

BACnet MS/TP / Modbus RTU with analogue setpoint (hybrid mode)

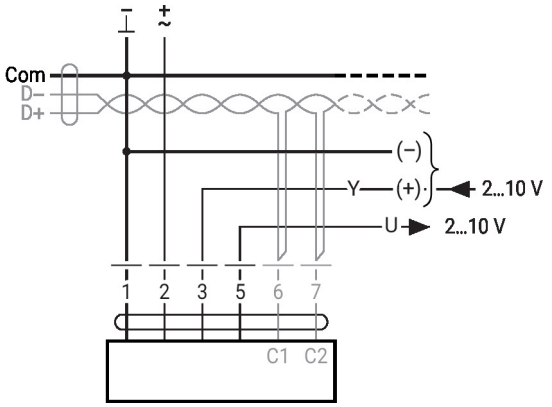

MP-Bus, supply via 3-wire connection

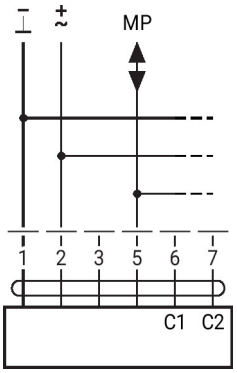

MP-Bus via 2-wire connection, local power supply

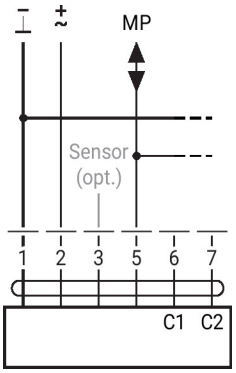

Operating controls and indicators

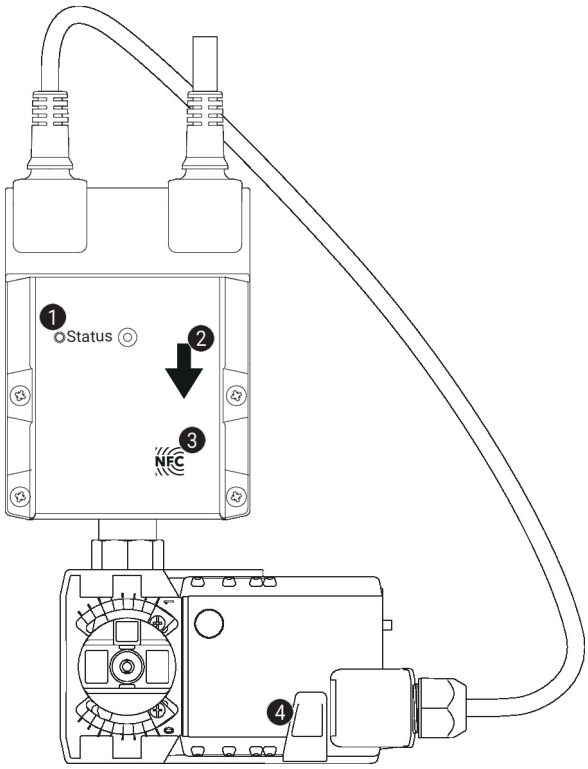

1 LED display green

On:	Device starting up
Off:	No power supply or wiring error
Flashing:	In operation (voltage ok)

2 Flow direction

3 NFC interface

4 Manual override button

Press button:	Gear train disengages, motor stops, manual override possible
Release button:	Gear train engages, standard mode, device performs synchronisation

Installation notes

Permissible installation orientation

The ball valve can be installed upright to horizontal. The ball valve may not be installed in a hanging position, i.e. with the spindle pointing downwards.

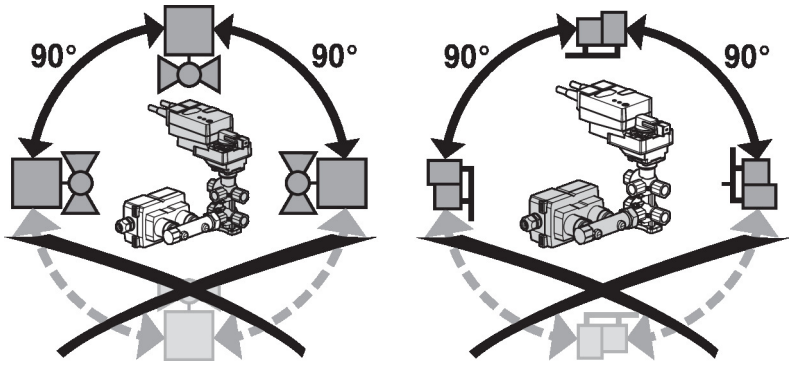

Water quality requirements

The water quality requirements specified in VDI 2035 must be adhered to.

Belimo valves are regulating devices. For the valves to function correctly in the long term, they must be kept free from particle debris (e.g. welding beads during installation work). The installation of a suitable strainer is recommended.

Servicing

Ball valves, rotary actuators and sensors are maintenance-free.

Before any service work on the control element is carried out, it is essential to isolate the device from the power supply (by unplugging the electrical cable if necessary). Any pumps in the part of the piping system concerned must also be switched off and the appropriate slide valves closed (allow all components to cool down first if necessary and always reduce the system pressure to ambient pressure level).

The system must not be returned to service until the device has been correctly reassembled in accordance with the instructions and the pipeline has been refilled by professionally trained personnel.

Flow direction

The flow direction must be observed. The position of the ball can be identified from the L-marking on the spindle.

Flow sequence 1 and sequence 2

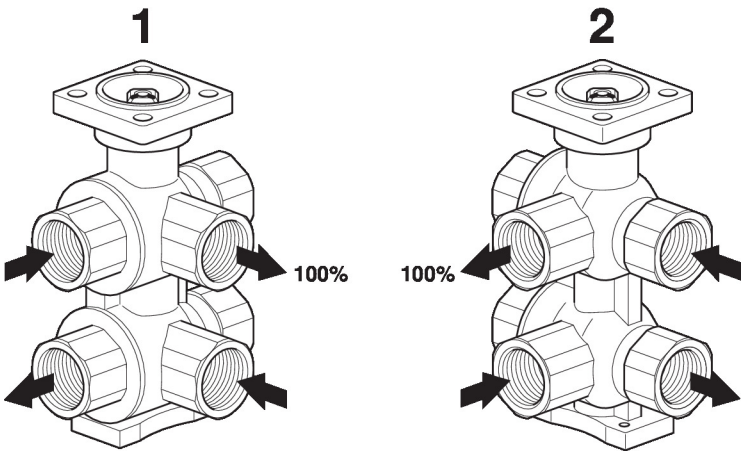

Installation notes

Valve characteristic curve

The lower diagram shows the flow characteristic depending on the control signal.

Valve characteristic curve

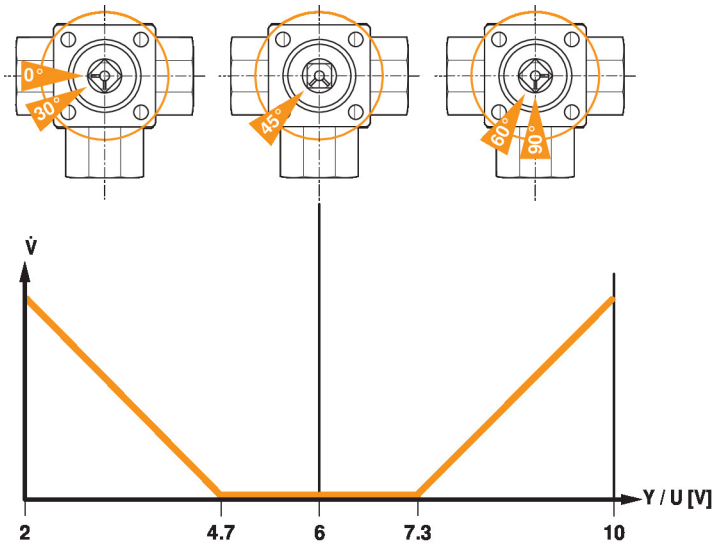

Inlet section

A flow calming section or inlet section in the direction of the flow must be maintained in front of the flow sensor to achieve the specified measuring accuracy.

According to EN 1434-4:2022 (out-of-plane double 90° bends), an inlet section of 0x DN is applicable. In all other cases, EN 1434-6:2022, Annex A.4, recommends an inlet section of ≥5x DN. See also the Belimo application information on the inlet section according to EN 1434.

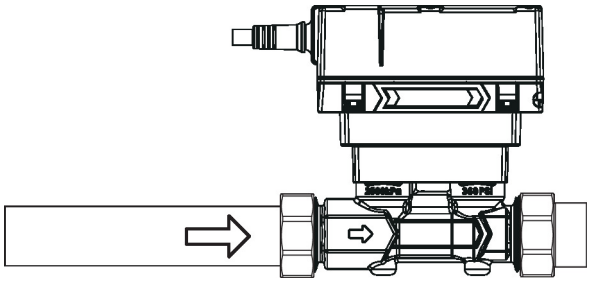

Installation notes

Types of installation

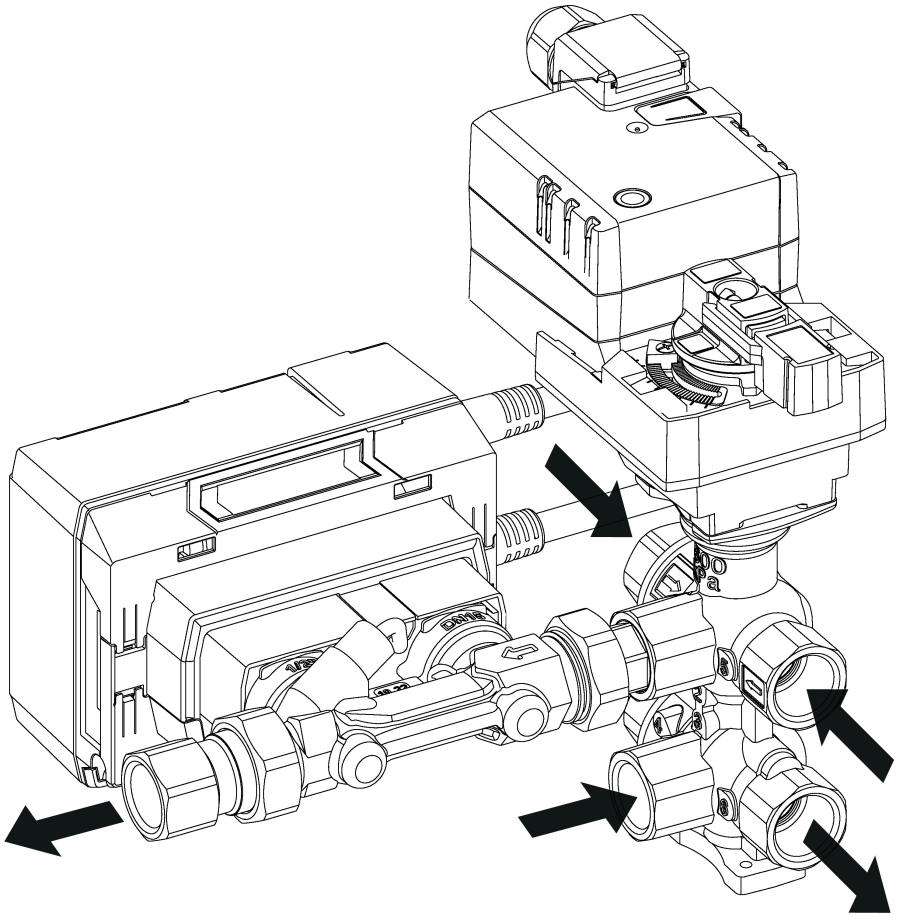

Flow sensor in return

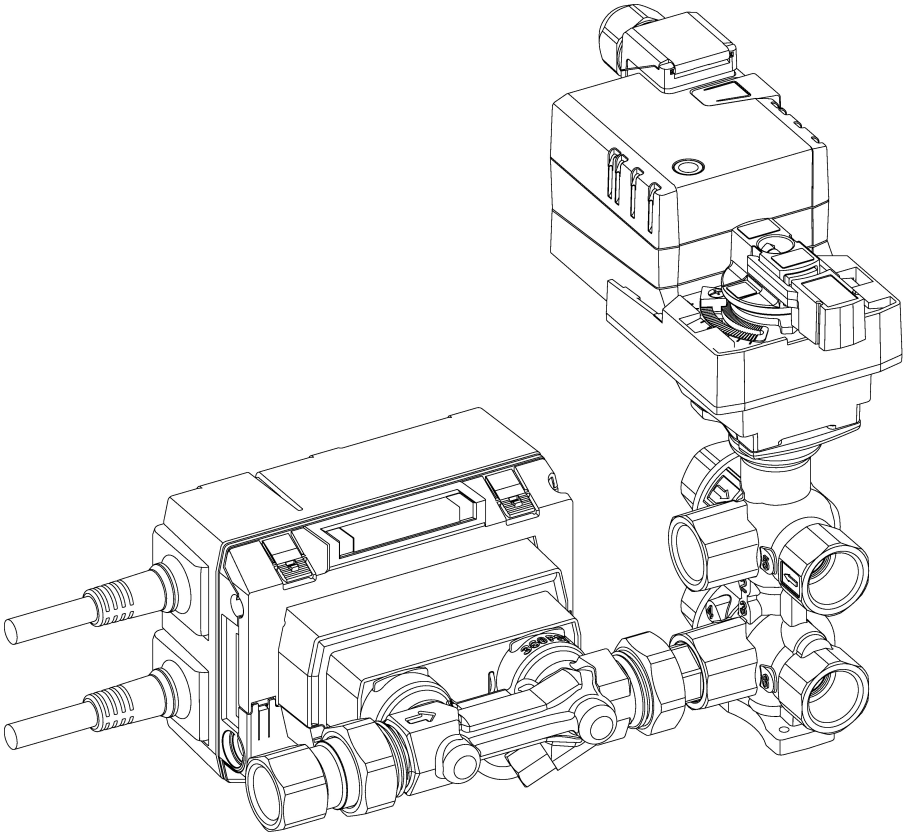

Installation notes

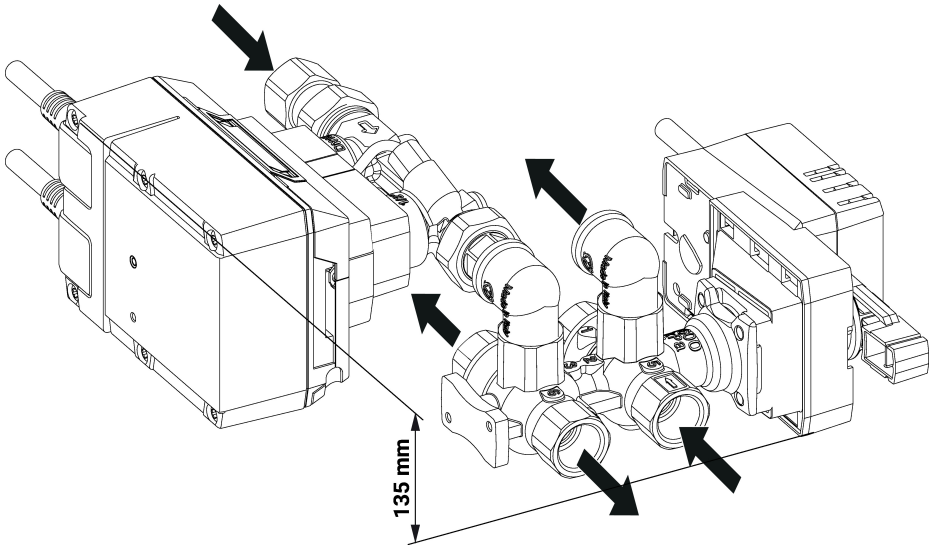

General notes

Valve selection

The valve is determined using the maximum required flow rate V'max.

A calculation of the Kvs value is not required.

V'max = 5...100% of V'nom

Minimum differential pressure (pressure drop)

The minimum required differential pressure (pressure drop through the valve) for achieving the desired flow V'max can be calculated with the aid of the theoretical Kvs value (see type overview) and the below-mentioned formula. The calculated value is dependent on the required maximum flow V'max. Higher differential pressures are compensated for automatically by the valve.

Formula

$$\Delta p_{min} = 100 \times \left(\frac{V'_{max}}{K_{vs}\ \text{theor.}} \right)^2$$

Δp_{min}: kPa
V'_{max}: m³/h
K_{vs} theor.: m³/h

Example (DN 15 with the desired maximum flow rate = 30% V'nom)

EP015R6+BAC..
K_{vs} theor. = 1.6 m³/h
V'_{nom} = 1500 l/h
30% x 1500 l/h = 450 l/h = 0.45 m³/h

$$\Delta p_{min} = 100 \times \left(\frac{V'_{max}}{K_{vs}\ \text{theor.}} \right)^2 = 100 \times \left(\frac{0.45\ m^3/h}{1.6\ m^3/h} \right)^2 = 7.9\ kPa$$

Service

Wireless connection

Belimo devices marked with the NFC logo can be operated with Belimo Assistant 2.

Requirement:

- NFC- or Bluetooth-capable smartphone
- Belimo Assistant 2 (Google Play and Apple App Store)

Align NFC-capable smartphone on the device so that both NFC antennas are superposed.

Connect Bluetooth-enabled smartphone via the Bluetooth-to-NFC converter ZIP-BT-NFC to the device. Technical data and operating instructions are shown in the ZIP-BT-NFC data sheet.

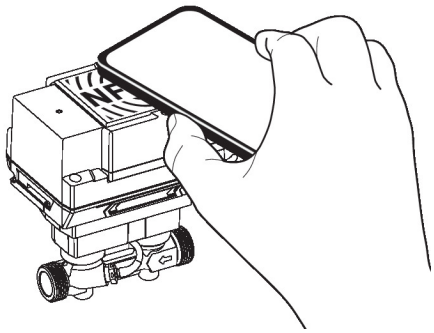

Dimensions

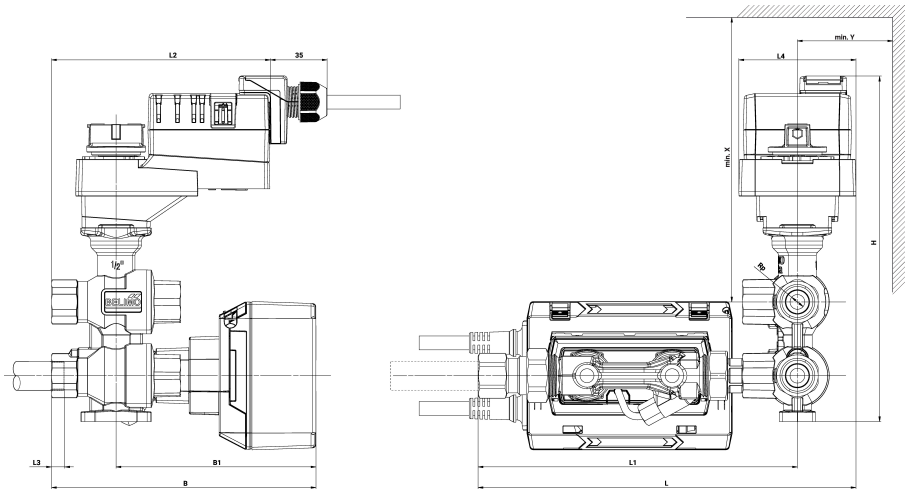

The flow sensor and the pipeline element can also be connected to port 3 (see installation notes).

Type	DN	Rp [“]	L [mm]	L1 [mm]	L2 [mm]	L3 [mm]	L4 [mm]	B [mm]	B1 [mm]	H [mm]	X [mm]	Y [mm]	kg
EP015R6+BAC	15	1/2	231	195	133	13	72	161	122	211	210	75	2.6
EP020R6+BAC	20	3/4	267	231	144	14	72	174	124	239	220	75	3.8
EP025R6+BAC	25	1	293	250	159	16	86	186	126	265	230	80	5.6

Further documentation

- General notes for project planning
- Overview MP Cooperation Partners
- Tool connections
- Modbus Interface description
- Description Data-Pool Values
- BACnet Interface description
- Introduction to MP-Bus Technology
- Application information inlet section according to EN 1434
- Quick Guide – Belimo Assistant 2