Globe valve, 2-way, Flange, PN 16

• For closed water and steam systems in the non-critical range
• For modulating control of air-handling and heating systems on the water side

Picture may differ from product

Type overview

Type	DN	Kvs [m³/h]	Stroke	PN	n(gl)	Sv min.
H610S	15	0.4	15 mm	16	3	50
H611S	15	0.63	15 mm	16	3	50
H612S	15	1	15 mm	16	3	50
H613S	15	1.6	15 mm	16	3	50
H614S	15	2.5	15 mm	16	3	50
H615S	15	4	15 mm	16	3	50
H619S	20	4	15 mm	16	3	100
H620S	20	6.3	15 mm	16	3	100
H624S	25	6.3	15 mm	16	3	100
H625S	25	10	15 mm	16	3	100
H632S	32	16	15 mm	16	3	100
H640S	40	25	15 mm	16	3	100
H650S	50	40	15 mm	16	3	100
H664S	65	58	18 mm	16	3	100
H665S	65	63	30 mm	16	3	100
H680S	80	100	30 mm	16	3	100
H6100S	100	145	30 mm	16	3	100
H6125S	125	220	40 mm	16	3	100
H6150S	150	320	40 mm	16	3	100

Technical data

Functional data	Fluid	Water and steam (Δp/P1 <0.4), water with glycol up to max. 50% vol.
	Fluid temperature	5...150°C [41...302°F]
	Fluid temperature note	120°C up to 1600 kPa 150°C up to 1400 kPa
	Flow characteristic	equal percentage (VDI/VDE 2173), optimised in the opening range
	Leakage rate	max. 0.05% of the Kvs value
	Closing point	Bottom (▼)
	Pipe connection	Flange according to ISO 7005-2
	Installation orientation	upright to horizontal (in relation to the spindle)
	Servicing	maintenance-free
Materials	Valve body	EN-GJL-250 (GG 25)

Technical data

Materials

Body finish	with protective paint
Closing element	Stainless steel
Spindle	Stainless steel
Spindle seal	PTFE V-ring
Seat	Stainless steel

Safety notes

- The valve has been designed for use in stationary heating, ventilation and air-conditioning systems and must not be used outside the specified field of application, especially in aircraft or in any other airborne means of transport.
- Only authorised specialists may carry out installation. All applicable legal or institutional installation regulations must be complied with during installation.
- The valve does not contain any parts that can be replaced or repaired by the user.
- The valve may not be disposed of as household refuse. All locally valid regulations and requirements must be observed.
- When determining the flow rate characteristic of controlled devices, the recognised directives must be observed.

Product features

Operating mode

The globe valve is adjusted by a globe valve actuator. The actuators are connected by a commercially available modulating or 3-point control system and move the valve cone, which acts as a throttling device, into the opening position dictated by the control signal.

Flow characteristic

An equal percentage flow characteristic is produced by the profile of the valve cone.

Fluid velocity

Standard values for low-noise operation in HVAC systems are fluid velocities of 1...2 m/s. At fluid velocities above 2 m/s, further flow effects like noise as well as cavitation can occur. This can reduce the service life of a valve depending on the situation.

Accessories

Electrical accessories

Description	Type
Stem heater for LV.., NV.., SV.. actuator	ZH24-1-A

Installation notes

Permissible installation orientation

The globe valve may be mounted upright to horizontal. It is not permissible to mount the globe valves with the stem pointing downwards.

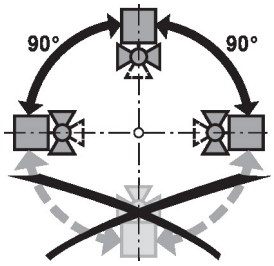

Water quality requirements

The water quality requirements specified in VDI 2035 must be adhered to.

Belimo valves are regulating devices. For the valves to function correctly in the long term, they must be kept free from particle debris (e.g. welding beads during installation work). The installation of a suitable strainer is recommended.

Installation notes

Servicing

Globe valves and globe valve actuators are maintenance-free.

Before any service work on the control element is carried out, it is essential to isolate the globe valve actuator from the power supply (by unplugging the electrical cables if necessary). Any pumps in the part of the piping system concerned must also be switched off and the appropriate slide valves closed (allow all components to cool down first if necessary and always reduce the system pressure to ambient pressure level).

The system must not be returned to service until the globe valve and the globe valve actuator have been reassembled correctly in accordance with the instructions and the pipeline has been refilled by professionally trained personnel.

Flow direction

The direction of flow, specified by an arrow on the housing, is to be complied with, since otherwise the valve could become damaged.

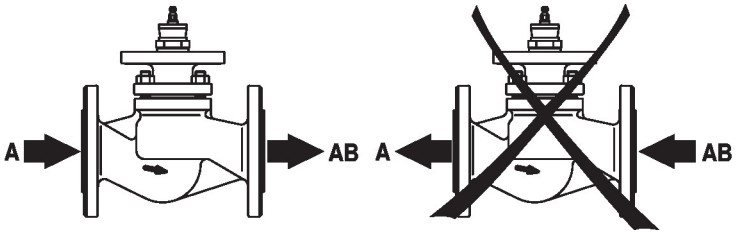

Differential and close-off pressure

The maximum differential and close-off pressure of globe valves depends on the mounted globe valve actuator. To ensure optimum operation and maximum service life, the maximum differential and close-off pressure in the table below must not be exceeded.

p_s <1600 kPa (PN16) t= 5... 120°C p_s <1400 kPa (PN16) t= 121... 150°C		LV..A.. 500N		NV..A.. 1000N		SV..A.. 1500N		AVK..A.. 2000N		EV..A.. 2500N		RV..A.. 4500N	
A AB	DN	Δps [kPa]	Δpmax [kPa]	Δps [kPa]	Δpmax [kPa]	Δps [kPa]	Δpmax [kPa]	Δps [kPa]	Δpmax [kPa]	Δps [kPa]	Δpmax [kPa]	Δps [kPa]	Δpmax [kPa]
H610S..11S	15	1600	1000	1600	1000	1600	1000						
H612S..15S	15	800	800	1600	1000	1600	1000						
H619S..20S	20	800	800	1600	1000	1600	1000						
H624S..25S	25	450	450	1300	1000	1600	1000						
H632S	32	300	300	950	950	1550	1000						
H640S	40	140	140	500	500	850	850						
H650S	50	60	60	300	300	500	500						
H664S	65			130	130	250	250						
H665S	65							400	400	550	550	1100	1000
H680S	80							250	250	350	350	700	700
H6100S	100							150	150	200	200	450	450
H6125S	125									110	110	250	250
H6150S	150									70	70	180	180

Dimensions

Dimensional drawings

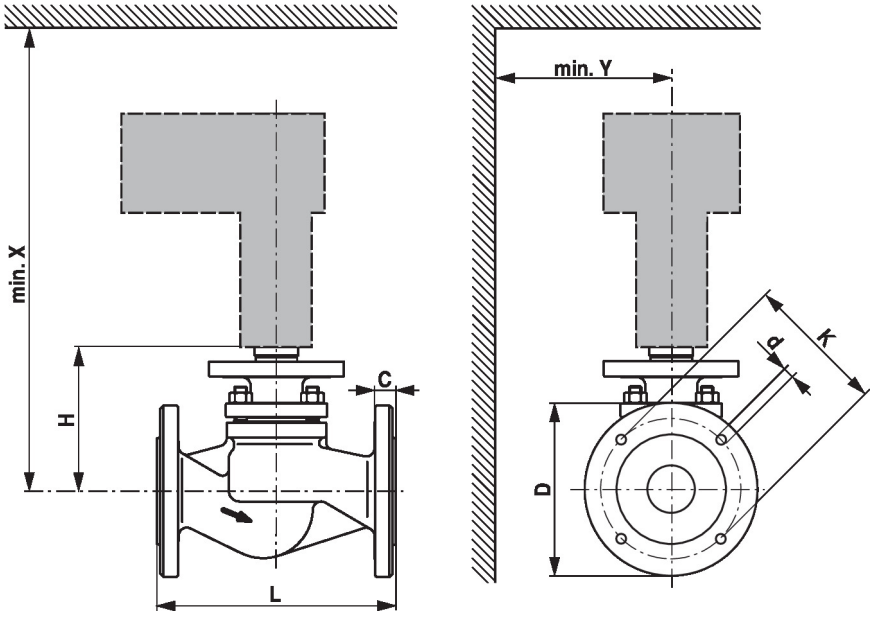

X/Y: Minimum distance with respect to the valve centre.
The actuator dimensions can be found on the respective actuator data sheet.

Type	DN	L [mm]	H [mm]	C [mm]	D [mm]	d [mm]	K [mm]	X [mm]	Y [mm]	kg
H610S	15	130	118	14	95	4 x 14	65	370	100	4.1
H611S	15	130	118	14	95	4 x 14	65	370	100	4.1
H612S	15	130	118	14	95	4 x 14	65	370	100	4.1
H613S	15	130	118	14	95	4 x 14	65	370	100	4.1
H614S	15	130	118	14	95	4 x 14	65	370	100	4.1
H615S	15	130	118	14	95	4 x 14	65	370	100	4.1
H619S	20	150	118	16	105	4 x 14	75	370	100	4.7
H620S	20	150	118	16	105	4 x 14	75	370	100	4.7
H624S	25	160	126	16	115	4 x 14	85	380	100	5.8
H625S	25	160	126	16	115	4 x 14	85	380	100	5.8
H632S	32	180	126	18	140	4 x 18	100	380	100	7.6
H640S	40	200	133	18	150	4 x 18	110	390	100	9.3
H650S	50	230	139	20	165	4 x 18	125	390	100	12
H664S	65	290	152	20	185	4 x 18	145	400	100	16
H665S	65	290	155	20	185	4 x 18	145	500	150	17
H680S	80	310	170	22	200	8 x 18	160	520	150	22
H6100S	100	350	190	24	220	8 x 18	180	540	150	34
H6125S	125	400	228	26	250	8 x 18	210	580	150	52
H6150S	150	480	288	26	285	8 x 22	240	640	150	87

Further documentation

- The complete product range for water applications
- Data sheets for globe valve actuators
- Installation instructions for valves and/or globe valve actuators
- Notes for project planning 2-way and 3-way globe valves