Immersion temperature sensor with fast response characteristics

For temperature measurement of liquid fluids. With 50/100/200 mm stainless steel probe and connection R 1/2". IP65 / NEMA 4 rated housing.

5 YEAR WARRANTY

Type Overview

Type	Output signal	Probe length	Probe diameter
01PT-1BH	Pt1000	50 mm	6/4 mm
01PT-1BL	Pt1000	100 mm	6/4 mm
01PT-1BP	Pt1000	200 mm	6/4 mm
01PT-1DH	Ni1000TK5000	50 mm	6/4 mm
01PT-1DL	Ni1000TK5000	100 mm	6/4 mm
01PT-1DP	Ni1000TK5000	200 mm	6/4 mm
01PT-1LH	NTC10k (10k2)	50 mm	6/4 mm
01PT-1LL	NTC10k (10k2)	100 mm	6/4 mm
01PT-1LP	NTC10k (10k2)	200 mm	6/4 mm

Technical data

Electrical data	Electrical connection	Pluggable spring loaded terminal block max. 2.5 mm²
	Cable entry	Cable gland with strain relief ø6...8 mm
Functional data	Medium	Air Water
Measuring data	Measured values	Temperature
Specification temperature passive	Measuring range	Pt.., Ni.. : -50...160°C [-60...320°F] NTC.. : -50...150°C [-60...300°F]
	Measuring current	Pt1000: <0.3 mA @ 0°C [32°F] Ni1000TK5000: <0.3 mA @ 0°C [32°F] NTC10k (10k2): <2 mA @ 25°C [77°F]
	Accuracy temperature	Passive sensors depending on used type Pt.. : Class B, ±0.3°C @ 0°C [±0.5°F @ 32°F] Ni.. : ±0.4°C @ 0°C [±0.7°F @ 32°F] NTC.. : ±0.2°C @ 25°C [±0.35°F @ 77°F]
	Time constant τ (63%) in water pipe	Typical 2.5 s
Safety data	Protection class IEC/EN	III, Protective Extra-Low Voltage (PELV)
	Power source UL	Class 2 Supply
	Degree of protection IEC/EN	IP65
	Degree of protection NEMA/UL	NEMA 4X
	Housing	UL Enclosure Type 4X
	EU Conformity	CE Marking

Technical data

Safety data	Certification IEC/EN	IEC/EN 60730-1
	Quality Standard	ISO 9001
	UL Approval	cULus acc. to UL60730-1A/-2-9, CAN/CSA E60730-1/-2-9
	Type of action	Type 1
	Rated impulse voltage supply	0.8 kV
	Pollution degree	3
	Ambient humidity	Max. 95% RH, non-condensing
	Ambient temperature	-35...50°C [-30...120°F]
	Fluid temperature	Pt.., Ni.. : -50...160°C [-60...320°F] NTC.. : -50...150°C [-60...300°F]
	Housing surface temperature	Max. 90°C [195°F]
Materials	Housing	Cover: PC, orange Bottom: PC, orange Seal: NBR70, black UV resistant
	Cable gland	Plug Adapter: PA66, black Nut: PA6, black
	Sensor probe	Stainless steel V4A (1.4404, 1.4571) Thread R 1/2" Nominal pressure PN10

Safety notes

This device has been designed for use in stationary heating, ventilation and air-conditioning systems and must not be used outside the specified field of application. Unauthorised modifications are prohibited. The product must not be used in relation with any equipment that in case of a failure may threaten humans, animals or assets.

Ensure all power is disconnected before installing. Do not connect to live/operating equipment.

Only authorised specialists may carry out installation. All applicable legal or institutional installation regulations must be complied with during installation.

The device contains electrical and electronic components and must not be disposed of as household refuse. All locally valid regulations and requirements must be observed.

Remarks

General remarks concerning sensors

Due to self-heating with 2 wire passive sensors, the supply wire current affects the measurement accuracy. So the supply current should not be higher than the measuring current values specified in this data sheet.

When using lengthy connecting cables (depending on the cross section used), the cable resistance must be taken into account. The lower the impedance of the sensor used, the greater the effect of the line resistance on the measurement, because it generates an offset.

Accessories

Optional accessories

Description	Type
Connection adapter flex conduit, M20x1.5, for cable gland 1x 6 mm, Multipack 10 pcs.	A-22G-A01.1

Wiring diagram

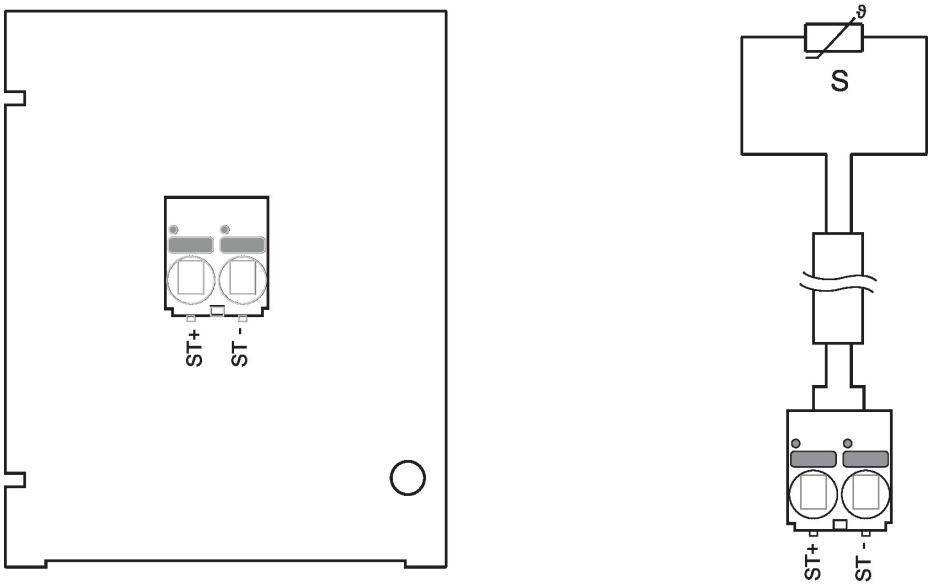

Dimensions

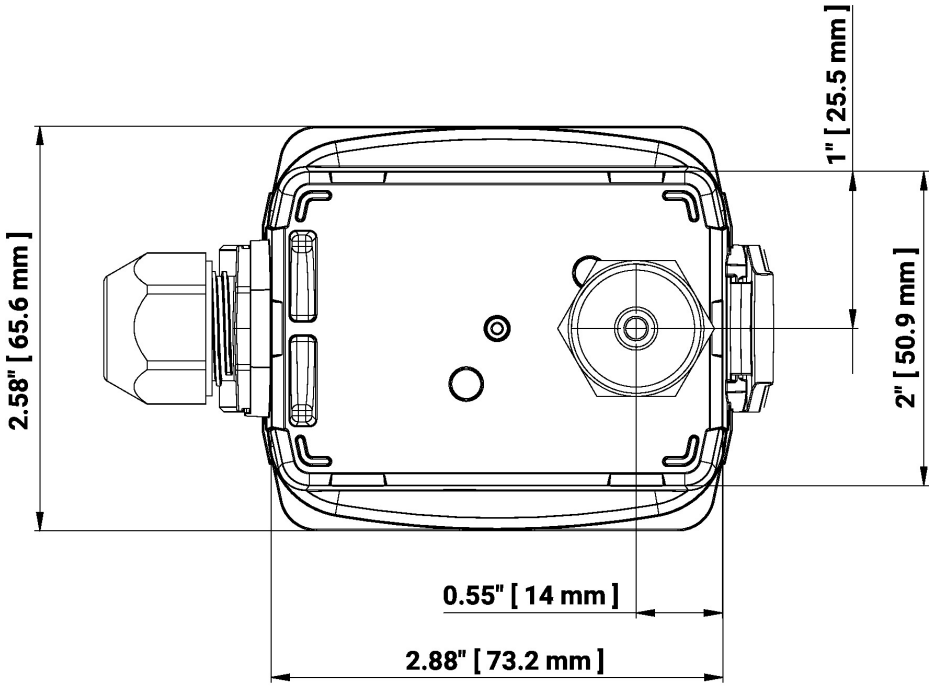
1" [25.5 mm]
2.58" [65.6 mm]
2" [50.9 mm]
0.55" [14 mm]
2.88" [73.2 mm]

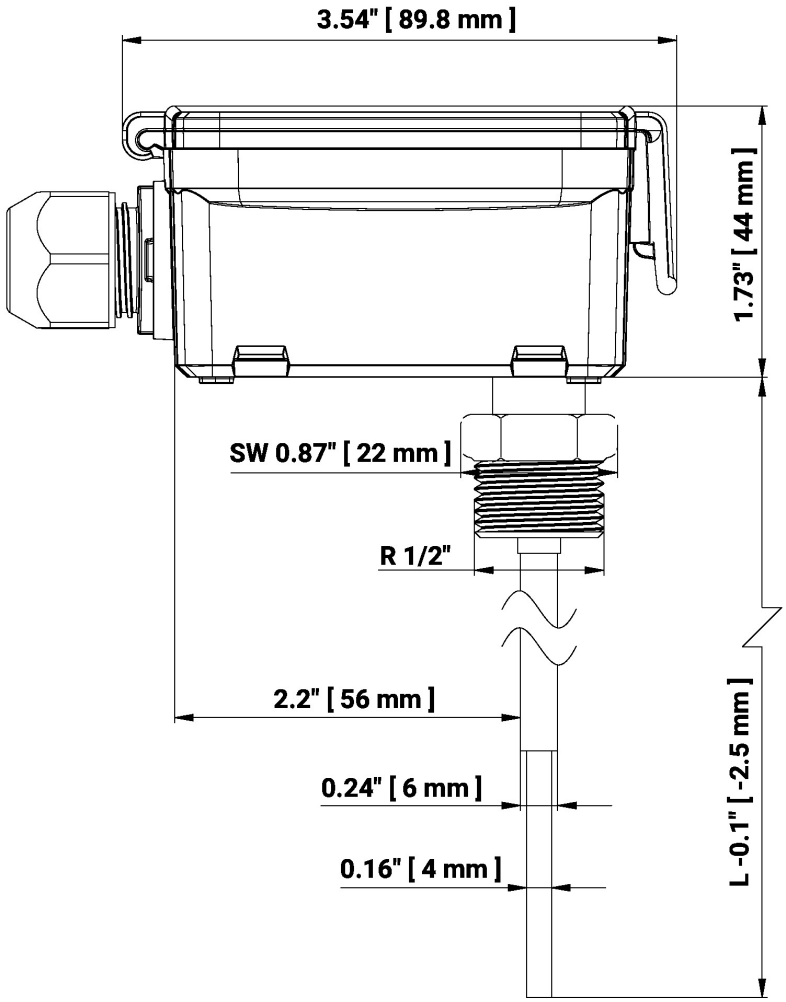
3.54" [89.8 mm]
1.73" [44 mm]
SW 0.87" [22 mm]
R 1/2"
2.2" [56 mm]
0.24" [6 mm]
0.16" [4 mm]
L -0.1" [-2.5 mm]

Dimensions

Type	Probe length	Weight
01PT-1BH	50 mm	0.17 kg
01PT-1BL	100 mm	0.17 kg
01PT-1BP	200 mm	0.19 kg
01PT-1DH	50 mm	0.17 kg
01PT-1DL	100 mm	0.17 kg
01PT-1DP	200 mm	0.18 kg
01PT-1LH	50 mm	0.17 kg
01PT-1LL	100 mm	0.17 kg
01PT-1LP	200 mm	0.19 kg

Further documentation

- Installation instructions
- Resistance characteristics