Rotary actuator fail-safe for butterfly valves

- Torque motor 160 Nm
- Nominal voltage AC 24...240 V / DC 24...125 V
- Control modulating, communicative, hybrid
- With 2 integrated auxiliary switches
- Conversion of sensor signals
- Communication via BACnet MS/TP, Modbus RTU, Belimo-MP-Bus or conventional control

Picture may differ from product

Technical data

Electrical data	Nominal voltage	AC 24...240 V / DC 24...125 V
	Nominal voltage frequency	50/60 Hz
	Nominal voltage range	AC 19.2...264 V / DC 19.2...137.5 V
	Power consumption in operation	52 W
	Power consumption in rest position	9 W
	Power consumption for wire sizing	with 24 V 54 VA / with 240 V 68 VA
	Inrush current (Imax)	20.0 A @ 5 ms
	Auxiliary switch	2x SPDT, 1x 10° / 1x 0...90° (default setting 85°)
	Auxiliary switch note	1x 10° / 1x 0...90° (default setting 85°)
	Switching capacity auxiliary switch	1 mA...3 A (0.5 A inductive), DC 5 V...AC 250 V
	Connection protective earth	earth terminal
	Connection supply	Terminals 2.5 mm^2
	Connection control	Terminals 1.5 mm^2
	Connection auxiliary switch	Terminals 2.5 mm^2
	Parallel operation	Yes (note the performance data)
Data bus communication	Communicative control	BACnet MS/TP Modbus RTU MP-Bus
	Number of nodes	BACnet / Modbus see interface description MP-Bus max. 8 (16)
Functional data	Torque motor	160 Nm (configured for D6200W/WL)
	Operating range Y	2...10 V
	Input impedance	100 kΩ
	Operating range Y variable	0.5...10 V 4...20 mA
	Position feedback U	2...10 V
	Position feedback U note	Max. 0.5 mA
	Position feedback U variable	0.5...10 V
	Setting fail-safe position	0...100%, adjustable with Belimo Assistant App (default setting 0%)
	Bridging time (PF)	2 s
	Bridging time (PF) variable	0...10 s
	Position accuracy	±5%
	Manual override	hand crank
	Running time motor	35 s / 90°
	Running time motor variable	30...120 s
	Running time fail-safe	30 s / 90°
	Sound power level, motor	68 dB(A)

Technical data

Functional data	Sound power level, fail-safe	61 dB(A)
	Position indication	Mechanical, integrated
Safety data	Protection class IEC/EN	I, protective earth (PE)
	Protection class UL	I, protective earth (PE)
	Degree of protection IEC/EN	IP66/67
	Degree of protection NEMA/UL	NEMA 4X
	Housing	UL Enclosure Type 4X
	EMC	CE according to 2014/30/EU
	Low voltage directive	CE according to 2014/35/EU
	Certification IEC/EN	IEC/EN 60730-1 and IEC/EN 60730-2-14
	UL Approval	cULus according to UL60730-1A, UL60730-2-14 and CAN/CSA E60730-1 The UL marking on the actuator depends on the production site, the device is UL-compliant in any case
	Type of action	Type 1.AA
	Rated impulse voltage supply	4 kV
	Rated impulse voltage control	0.8 kV
	Rated impulse voltage auxiliary switch	2.5 kV
	Pollution degree	3
	Ambient humidity	Max. 100% RH
	Ambient temperature	-30...50°C [-22...122°F]
	Storage temperature	-40...80°C [-40...176°F]
	Servicing	maintenance-free
Weight	Weight	6.5 kg
Terms	Abbreviations	POP = Power off position / fail-safe position CPO = Controlled power off / controlled fail-safe PF = Power fail delay time / bridging time

Safety notes

- This device has been designed for use in stationary heating, ventilation and air-conditioning systems and must not be used outside the specified field of application, especially in aircraft or in any other airborne means of transport.
- Caution: Mains voltage!
- The device has a protective earthing. Incorrect connection of the protective earth can lead to hazards due to electrical shock.
- Only authorised specialists may carry out installation. All applicable legal or institutional installation regulations must be complied with during installation.
- Apart from the wiring compartment, the device may only be opened at the manufacturer's site. It does not contain any parts that can be replaced or repaired by the user.
- The device is not designed for applications where chemical influences (gases, fluids) are present or for utilisation in corrosive environments in general.
- The device contains electrical and electronic components and must not be disposed of as household refuse. All locally valid regulations and requirements must be observed.
- The two switches integrated in the actuator are to be operated either on mains voltage or on safety extra-low voltage. The combination mains voltage/safety extra-low voltage is not permitted.
- In case of maintenance work on the hydronic system, the correct valve position must be set via the control signal. Additionally, the actuator has to be disconnected from the power supply. The hand crank and manual override must not be used as a safety measure to maintain the set valve position.

Product features

Fields of application

The actuator is particularly suitable for utilisation in outdoor applications and is protected against the following weather conditions:
- UV radiation
- Dirt / Dust
- Rain / Snow
- Air humidity

Pre-charging time (start up)

The capacitor actuators require a pre-charging time. This time is used for charging the capacitors up to a usable voltage level. This ensures that, in the event of a power failure, the actuator can move at any time from its current position into the preset fail-safe position.

The duration of the pre-charging time depends mainly on following factors:

– Duration of the power failure

– PF delay time (bridging time)

Typical pre-charging time

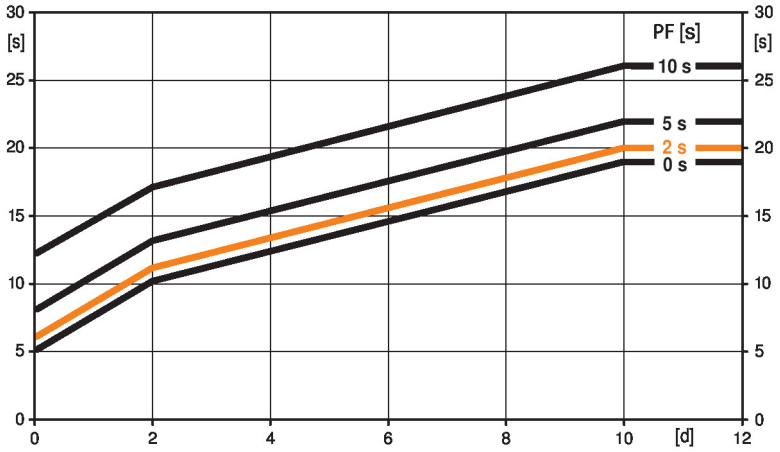

[d] = Power failure in days
[s] = Pre-charging time in seconds
PF[s] = Bridging time
Calculation example: Given a power failure of 3 days and a bridging time (PF) set at 5 s, the actuator requires a pre-charging time of 14 s after the power has been reconnected (see graphic).

PF [s]	[d]				
	0	1	2	7	≥10
0	5	8	10	15	19
2	6	9	11	16	20
5	8	11	13	18	22
10	12	15	17	22	26
	[s]				

Delivery condition (capacitors)

The actuator is completely discharged after delivery from the factory, which is why the actuator requires approximately 20 s pre-charging time before initial commissioning in order to bring the capacitors up to the required voltage level.

Bridging time

Power failures can be bridged up to a maximum of 10 s.

In the event of a power failure, the actuator will remain stationary in accordance with the set bridging time. If the power failure is greater than the set bridging time, then the actuator will move into the selected fail-safe position.

The pre-programmed bridging time is set to 2 s. This can be modified on site in operation with the use of the "Belimo Assistant App".

Setting fail-safe position (POP)

The desired fail-safe position can be set 0...100% with the "Belimo Assistant App" or ZTH EU. The setting always refers to the adapted angle of rotation range. In the event of a power failure, the actuator will move into the selected fail-safe position.

Converter for sensors

Connection option for two sensors (passive, active or switching contacts). In this way, the analogue sensor signal can be easily digitised and transferred to the bus systems BACnet or Modbus.

Internal heating

An internal heater prevents condensation buildup.

Thanks to the integrated temperature and humidity sensor, the built-in heater automatically switches on/off.

Product features

Configurable device
The factory settings cover the most common applications.
Belimo Assistant 2 is required for configuration via Near Field Communication (NFC) and simplifies commissioning. Moreover, Belimo Assistant 2 provides a variety of diagnostic options.
The ZTH EU service tool provides a selection of both diagnostic and setting options.

Combination analogue - communicative (hybrid mode)
With conventional control by means of an analogue control signal, BACnet or Modbus can be used for the communicative position feedback

Simple direct mounting
Simple direct mounting on the butterfly valve. The mounting orientation in relation to the butterfly valve can be selected in 90° (angle) increments.

Manual override
The valve can be manually operated using a hand crank. Unlocking is carried out manually by removing the hand crank.

High functional reliability
The actuator is overload protected, requires no limit switches and automatically stops when the end stop is reached.

Flexible signalling
The actuator has one auxiliary switch with a fixed setting (10°) and one adjustable auxiliary switch (0...90°).

Accessories

Tools

Description	Type
Service tool for wired and wireless setup, on-site operation and troubleshooting.	Belimo Assistant 2
Belimo Assistant Link Bluetooth and USB to NFC and MP-Bus converter for configurable and communicative devices	LINK.10
Connecting cable 5 m, A: RJ11 6/4 LINK.10, B: 6-pin for connection to service socket	ZK1-GEN
Connecting cable 5 m, A: RJ11 6/4 LINK.10, B: free wire end for connection to MP/PP terminal	ZK2-GEN

Electrical accessories

Description	Type
Signal converter voltage/current 100 kΩ 4...20 mA, Supply AC/DC 24 V	Z-UIC

Mechanical accessories

Description	Type
Position indicator and tappet shaft, F07, square 45° offset, SW 17, DN 125...300	ZPR01
Tappet shaft, F07, square 45° offset, SW 17	ZPR02
Position indicator and tappet shaft, F05, square 45° offset, SW 14, DN 80...100	ZPR03
Hand crank for PR/PM actuator	ZPR20

Sensors

Description	Type
Duct/Immersion sensor Temperature 50 mm x 6 mm Pt1000	01DT-1BH
Duct/Immersion sensor Temperature 50 mm x 6 mm Ni1000	01DT-1CH
Duct/Immersion sensor Temperature 100 mm x 6 mm Pt1000	01DT-1BL
Duct/Immersion sensor Temperature 100 mm x 6 mm Ni1000	01DT-1CL
Duct/Immersion sensor Temperature 150 mm x 6 mm Pt1000	01DT-1BN
Duct/Immersion sensor Temperature 150 mm x 6 mm Ni1000	01DT-1CN
Duct/Immersion sensor Temperature 200 mm x 6 mm Pt1000	01DT-1BP
Duct/Immersion sensor Temperature 200 mm x 6 mm Ni1000	01DT-1CP
Duct/Immersion sensor Temperature 300 mm x 6 mm Pt1000	01DT-1BR
Duct/Immersion sensor Temperature 300 mm x 6 mm Ni1000	01DT-1CR
Duct/Immersion sensor Temperature 450 mm x 6 mm Pt1000	01DT-1BT
Duct/Immersion sensor Temperature 450 mm x 6 mm Ni1000	01DT-1CT

Electrical installation

Caution: Mains voltage!

Parallel connection of other actuators possible. Observe the performance data.

The wiring of the line for BACnet MS/TP / Modbus RTU is to be carried out in accordance with applicable RS-485 regulations.

AC 24...240 V / DC 24...125 V

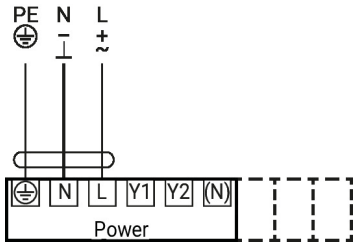

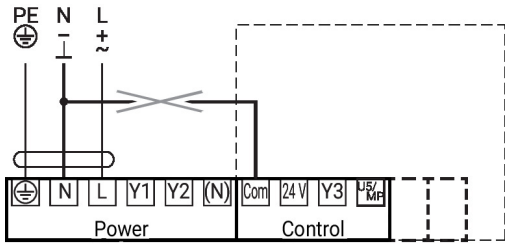

Power supply must not be connected to the signal terminals!

Modulating control

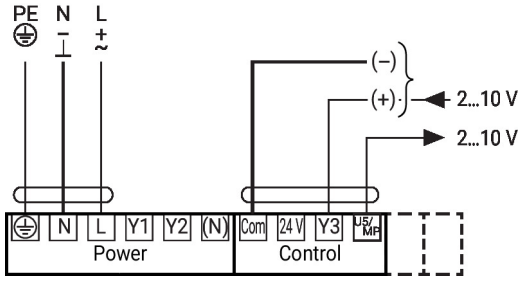

Parallel circuit 2...10 V

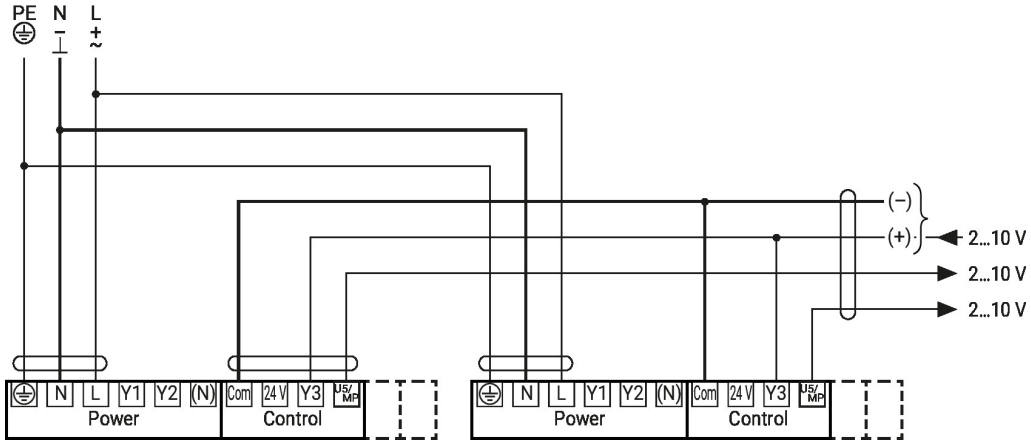

Setpoint 2...10 V

Electrical installation

Parallel circuit 4...20 mA

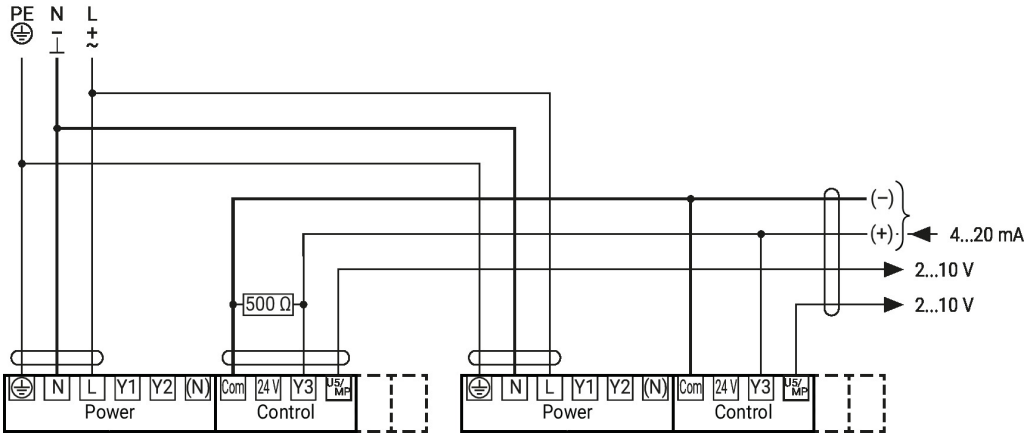

Setpoint 2...10 V

Auxiliary switch

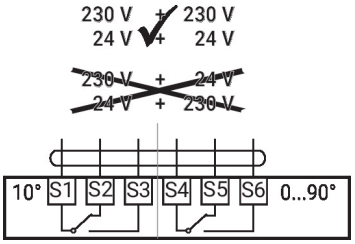

Further electrical installations

MP-Bus

MP-Bus Network topology

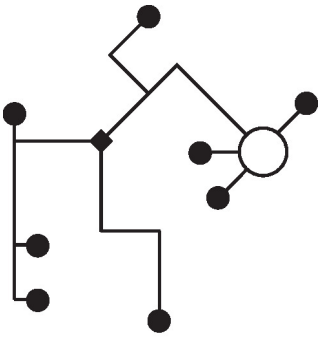

There are no restrictions for the network topology (star, ring, tree or mixed forms are permitted).
Supply and communication in one and the same 3-wire cable
• no shielding or twisting necessary
• no terminating resistors required

Functions with specific parameters (configuration necessary)

Control open/close

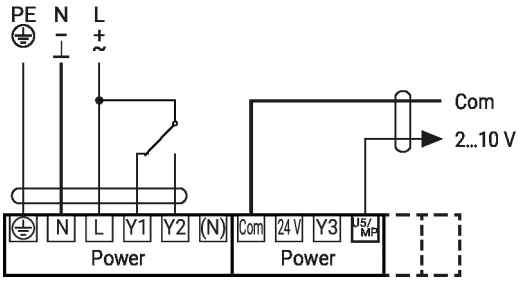

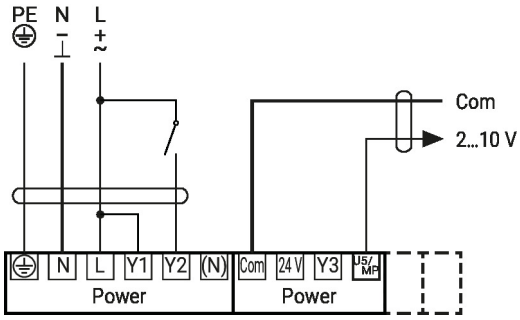

Further electrical installations

Functions with specific parameters (configuration necessary)

Control 3-point

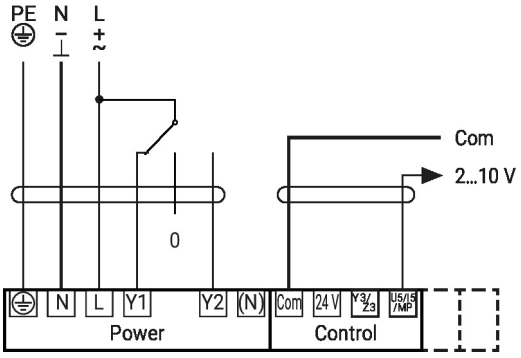

Control 4...20 mA

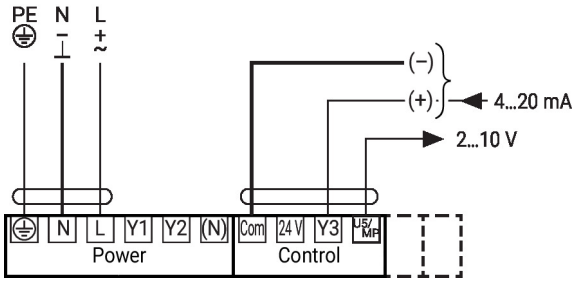

Positioner SG..

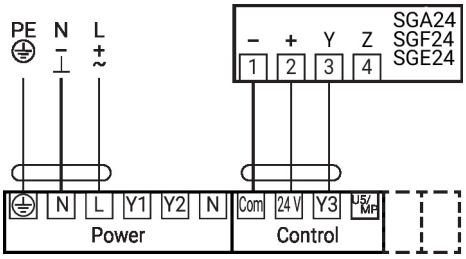

Note
Maximum output power «DC 24 V out» 1.2 W @ 50 mA!
A separate isolating transformer must be used for higher performance!

Connection on the MP-Bus

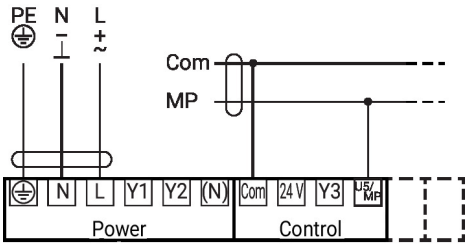

Connection BACnet MS/TP / Modbus RTU

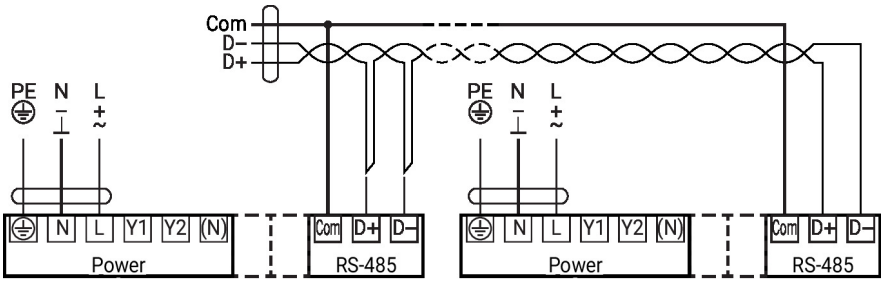

Further electrical installations

Functions with specific parameters (configuration necessary)

Connection BACnet MS/TP / Modbus RTU with analogue setpoint (hybrid mode)

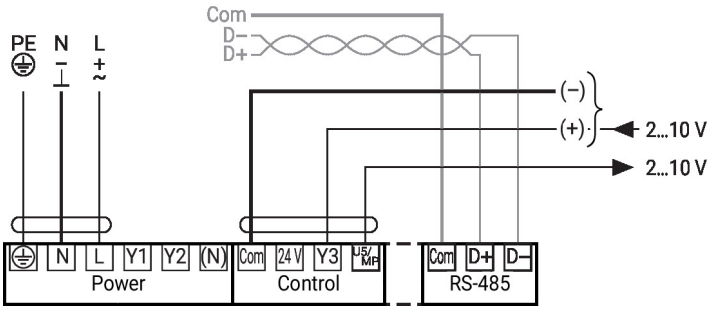

Connection BACnet MS/TP / Modbus RTU with analogue primary/secondary operation

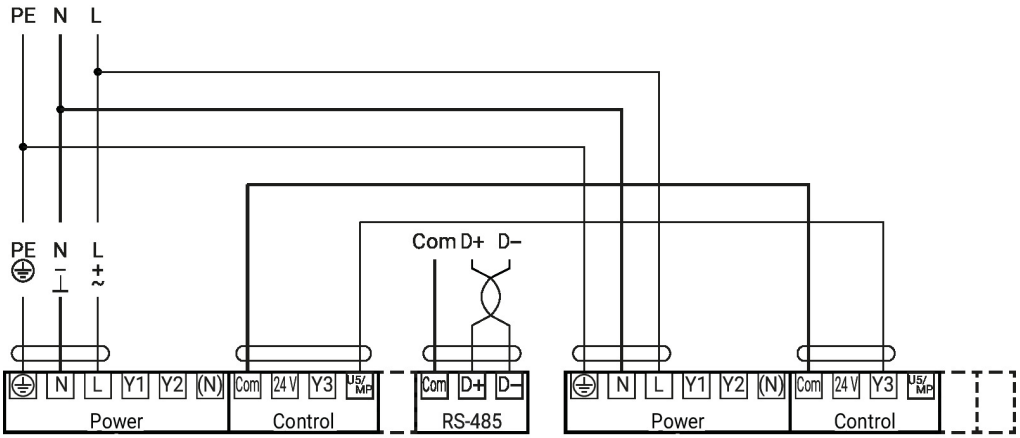

Sensor connection

Connection of active sensors (BACnet MS/TP / Modbus RTU)

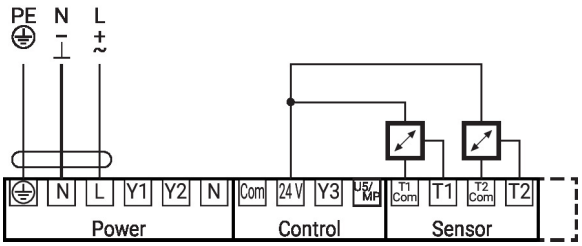

Possible input voltage range:
0...10 V
Resolution 5 mV
To capture for example:
- Active temperature sensors
- Flow sensors
- Pressure / differential pressure sensors

Switching contact connection (BACnet MS/TP / Modbus RTU)

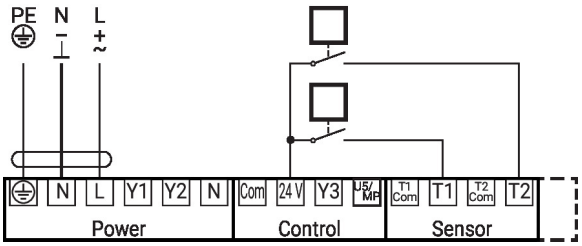

Switching contact requirements:
The switching contact must be able to switch a current of 16 mA at 24 V accurately.
To capture for example:
- Flow monitors
- Operation / malfunction messages of chillers

Further electrical installations

Sensor connection

Connection of passive sensors (BACnet MS/TP / Modbus RTU)

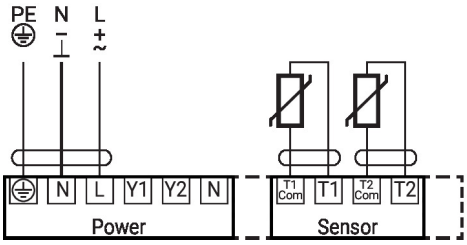

1)	2)
500 Ω...2 kΩ	+/-1%
2 kΩ...10 kΩ	+/-2%
10 kΩ...55 kΩ	+/-6%

1) Resistance range
2) Tolerance measured value
Compensation of the measured value is recommended
- Suitable for Ni1000 and Pt1000
- Suitable Belimo types 01DT-..

Operating controls and indicators

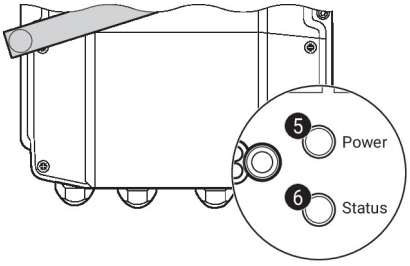

5 Push-button and LED display green

Off:	No power supply or malfunction
On:	In operation
Press button:	Triggers test run, followed by standard mode

6 Push-button and LED display yellow

Off:	Standard mode
On:	Test run active
Flickering:	BACnet / Modbus communication active
Flashing:	Request for addressing from MP client
Press button:	Confirmation of the MP addressing

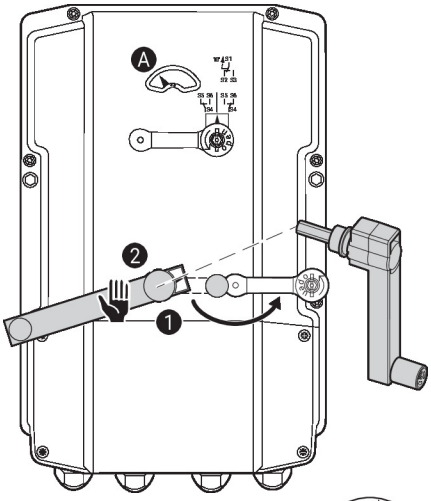

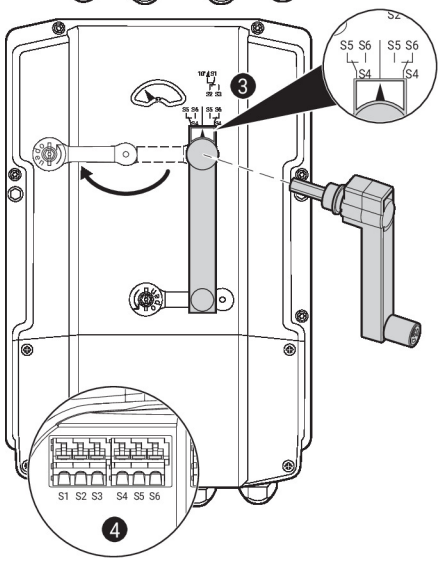

Auxiliary switch settings

> **Note:** Perform settings on the actuator only in deenergised state.

For the auxiliary switch position settings, carry out points 1 to 4 successively.

1 Gear train disengagement
Opening the manual override cover and adjusting the hand crank.
Manual override is possible.

2 Manual override
Turn the hand crank until the desired switching position A is indicated and then remove the hand crank.

3 Auxiliary switch
Opening the auxiliary switch adjustment cover and adjusting the hand crank.
Turn the hand crank until the arrow points to the vertical line.

4 Terminals
Connect continuity tester to S4 + S5 or to S4 + S6.
If the auxiliary switch should switch in the opposite direction, rotate the hand crank by 180°.

Service

Using Belimo Assistant 2, device parameters can be modified. Belimo Assistant 2 can operate on a smartphone, tablet or PC. The available connection options vary depending on the hardware on which Belimo Assistant 2 is installed.

For more information about Belimo Assistant 2, refer to the Quick Guide – Belimo Assistant 2.

Wireless connection

Belimo devices marked with the NFC logo can be accessed either directly with an NFC-capable smartphone or with a Bluetooth-capable smartphone connected to Belimo Assistant Link.

Requirement:

- NFC- or Bluetooth-capable smartphone or tablet
- Belimo Assistant 2 (Google Play and Apple App Store)

Align the NFC-capable smartphone or Belimo Assistant Link with the device's NFC logo so that both NFC antennas are superposed.

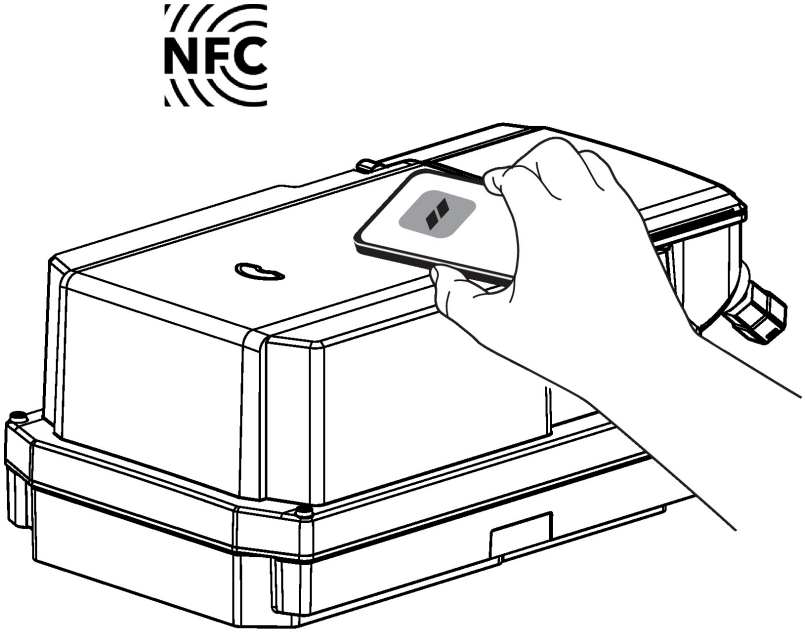

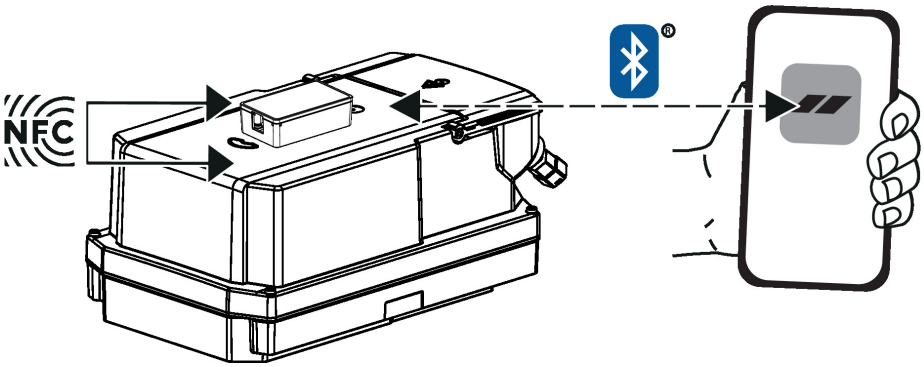

Service

Wired connection

Belimo devices can be accessed by connecting Belimo Assistant Link to the USB port on a PC or laptop and to the service socket or MP-Bus wire on the device.

Belimo Assistant 2 acts as MP client. Therefore, no other MP client shall be connected to the device.

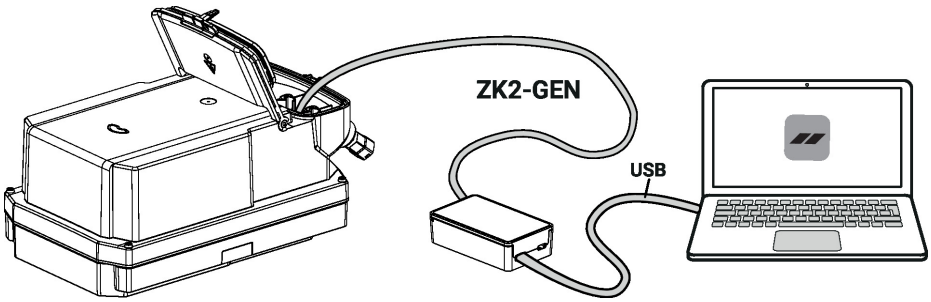

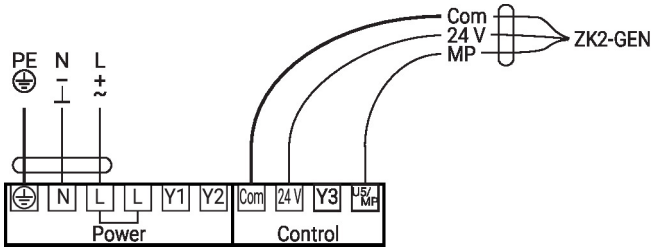

Dimensions

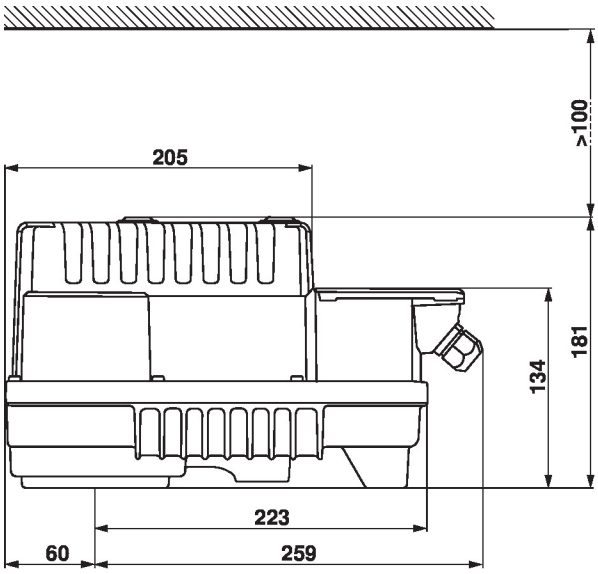

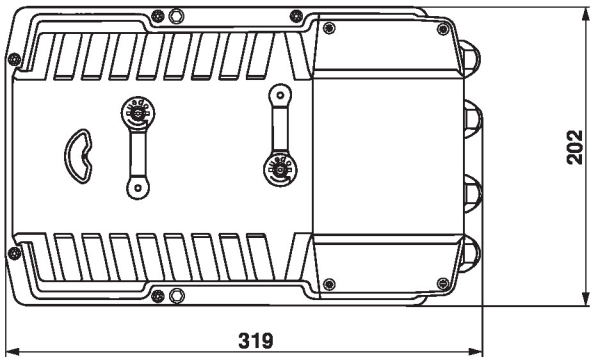

Further documentation

- Tool connections
- BACnet Interface description
- Modbus Interface description
- Overview MP Cooperation Partners
- Introduction to MP-Bus Technology
- MP Glossary
- The complete product range for water applications
- Data sheets for butterfly valves
- Installation instructions for actuators and/or butterfly valves
- General notes for project planning
- Quick Guide – Belimo Assistant 2