3-way butterfly valve (2x butterfly valve with 2x actuator without T-piece), 3-way, Flange, PN 16

- Torque motor 160 Nm
- Nominal voltage AC 24...240 V / DC 24...125 V
- Control Open/close, modulating, communicative, hybrid
- for mixing and diverting applications
- For water-side changeover and control applications
- Communication via BACnet MS/TP, Modbus RTU, Belimo-MP-Bus or conventional control

Picture may differ from product

Type Overview

Type	DN	Kvmax [m³/h]	Kvs [m³/h]	PN
D7200WL/BAC	200	1800	800	16
D7250WL/BAC	250	3000	1200	16
D7300WL/BAC	300	4700	1700	16

General technical data can be found on the data sheets for the products D6..NL, D6..WL and PRCA-BAC-S2-T.

Kvmax: for change-over applications

Kvs: for control applications with linear or equal-percentage characteristic curve with opening angle 60% (configured with Belimo Assistant 2).

The maximum flow speed of 4 m/s may not be exceeded in the butterfly valve.

Technical data

Electrical data	Nominal voltage	AC 24...240 V / DC 24...125 V
	Nominal voltage frequency	50/60 Hz
	Nominal voltage range	AC 19.2...264 V / DC 19.2...137.5 V
	Power consumption in operation	40 W
	Power consumption in rest position	12 W
	Power consumption for wire sizing	with 24 V 40 VA / with 240 V 104 VA
Data bus communication	Communicative control	BACnet MS/TP Modbus RTU MP-Bus
	Number of nodes	BACnet / Modbus see interface description MP-Bus max. 8 (16)
Functional data	Operating range Y	2...10 V
	Operating range Y variable	0.5...10 V 4...20 mA
	Position feedback U	2...10 V
	Position feedback U variable	0.5...10 V
	Running time motor	35 s / 90°
	Running time motor variable	30...120 s
	Sound power level motor	68 dB(A)
	Fluid	Water, water with glycol up to max. 50% vol.
	Fluid temperature	-20...120°C [-4...248°F]
	Close-off pressure Δps	1200 kPa
	Differential pressure Δpmax	300 kPa
	Flow	100% opening angle: bypass B–AB: 70% of Kvmax value; 60% opening angle: bypass B–AB: 100% of Kvs value

Technical data

Functional data	Flow characteristic	0...60% opening angle: equal percentage (VDI/VDE 2173) 0...100% opening angle: S-form
	Flow characteristic note	0...100% opening angle: linear The flow characteristic can be configured to equal percentage or linear using Belimo Assistant 2. The control signal must be inverted for one of the two control paths.
	Leakage rate	tight, leakage rate A (EN 12266-1)
	Pipe connection	Flange according to ISO 7005-1 according to EN 1092-1 according to ISO 7005-2 according to EN 1092-2
	Installation orientation	upright to horizontal (in relation to the spindle)
	Servicing	maintenance-free
	Manual override	hand crank
Safety data	Degree of protection IEC/EN	IP66/67
	Degree of protection NEMA/UL	NEMA 4X
	Housing	UL Enclosure Type 4X
	Pollution degree	3
	Ambient humidity	Max. 100% RH
	Ambient temperature	-30...50°C [-22...122°F]
	Storage temperature	-40...80°C [-40...176°F]
Materials	Valve body	EN-GJS-400-18-LT (GGG 40.3)
	Body finish	polyester powder coated

Safety notes

- The valve has been designed for use in stationary heating, ventilation and air-conditioning systems and must not be used outside the specified field of application, especially in aircraft or in any other airborne means of transport.
- Caution: Mains voltage!
- Only authorised specialists may carry out installation. All applicable legal or institutional installation regulations must be complied with during installation.
- Apart from the wiring compartment, the device may only be opened at the manufacturer's site. It does not contain any parts that can be replaced or repaired by the user.
- The device is not designed for applications where chemical influences (gases, fluids) are present or for utilisation in corrosive environments in general.
- The device contains electrical and electronic components and must not be disposed of as household refuse. All locally valid regulations and requirements must be observed.
- In case of maintenance work on the hydronic system, the correct valve position must be set via the control signal. Additionally, the actuator has to be disconnected from the power supply. The hand crank and manual override must not be used as a safety measure to maintain the set valve position.

Product features

Operating mode

The 3-way butterfly valve is operated by two multifunctional actuators (for isolation and control applications). Both actuators can be controlled with the same control signal, however, one of the actuators needs to be set up for the use of an inverted control signal. This settings can be made using the Belimo Assistant App. It is recommended to monitor the feedback signal U5 of the actuators to ensure that the 3-way function in the control and bypass path is guaranteed.

Product features

Configurable device

For changeover applications, both actuators are configured with either open/close or communicative control. In addition, the control signal of one of the two actuators is set to "inverted". This allows both actuators to be controlled with the same control signal.

For control functions, the control can be selected between 2...10 V, 0.5...10 V, 4...20 mA or communicative. The control signal of one of the two actuators is configured to be "inverted", and additionally a Kv setting is made via the limitation of the opening angle.

Manual override

The valve can be manually operated using a hand crank. Unlocking is carried out manually by removing the hand crank.

Combination valve/actuator

Two butterfly valves and two actuators are supplied separately, so that any installation on one T-piece is possible. The T-piece must be ordered separately.

Accessories

Tools

Description	Type
Service tool for wired and wireless setup, on-site operation and troubleshooting.	Belimo Assistant 2
Belimo Assistant Link Bluetooth and USB to NFC and MP-Bus converter for configurable and communicative devices	LINK.10
Connecting cable 5 m, A: RJ11 6/4 LINK.10, B: 6-pin for connection to service socket	ZK1-GEN
Connecting cable 5 m, A: RJ11 6/4 LINK.10, B: free wire end for connection to MP/PP terminal	ZK2-GEN

Electrical accessories

Description	Type
Signal converter voltage/current 100 kΩ 4...20 mA, Supply AC/DC 24 V	Z-UIC

Mechanical accessories

Description	Type
T-piece for 3-way butterfly valve DN 200	ZD7200
T-piece for 3-way butterfly valve DN 250	ZD7250
T-piece for 3-way butterfly valve DN 300	ZD7300

Electrical installation

Caution: Mains voltage!

The wiring of the line for BACnet (MS/TP) has to be carried out in accordance with applicable RS-485 regulations.

Parallel circuit 2...10 V

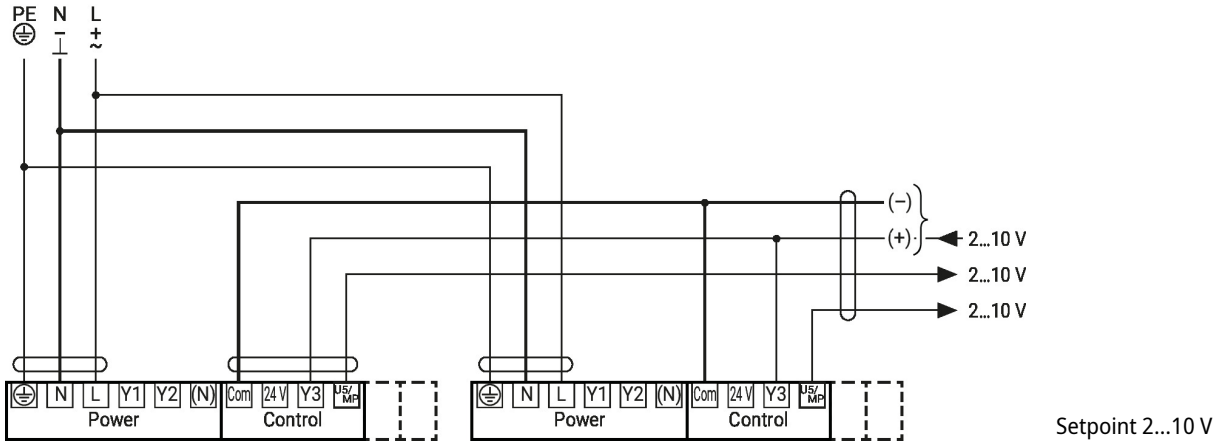

Electrical installation

Parallel circuit 4...20 mA

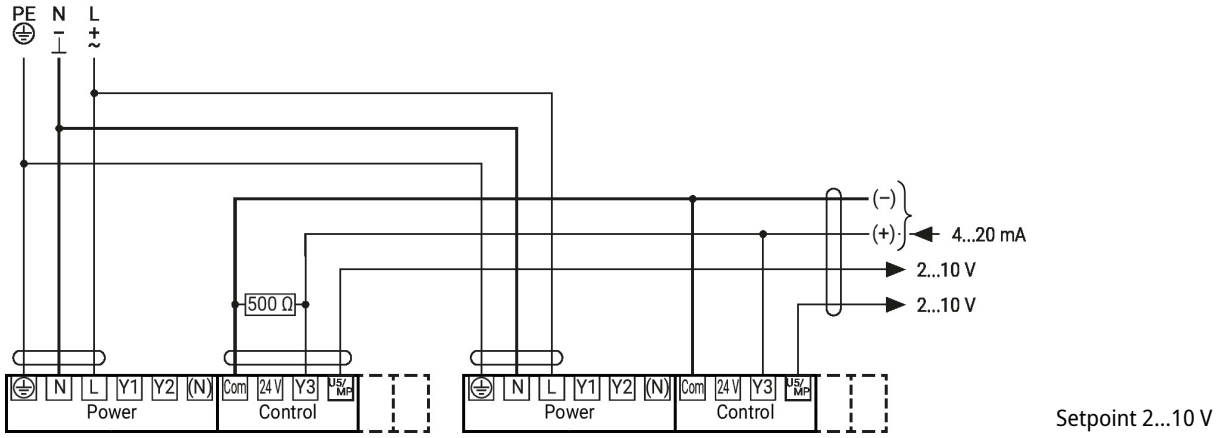

Operating controls and indicators

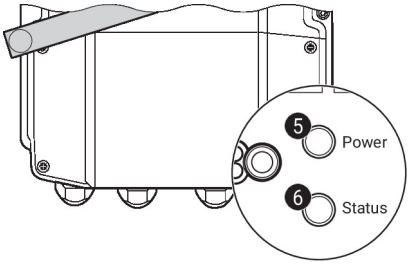

5 Push-button and LED display green

Off:	No power supply or malfunction
On:	In operation
Press button:	Triggers test run, followed by standard mode

6 Push-button and LED display yellow

Off:	Standard mode
On:	Test run active
Flickering:	BACnet / Modbus communication active
Flashing:	Request for addressing from MP client
Press button:	Confirmation of the MP addressing

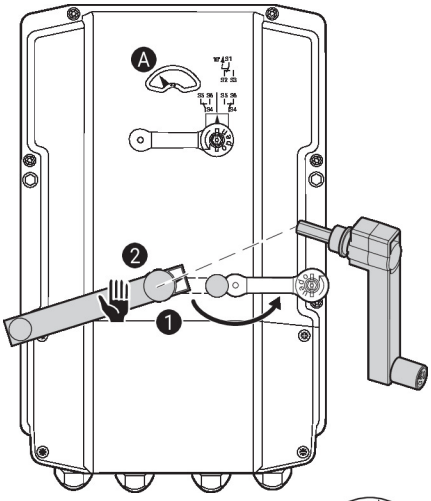

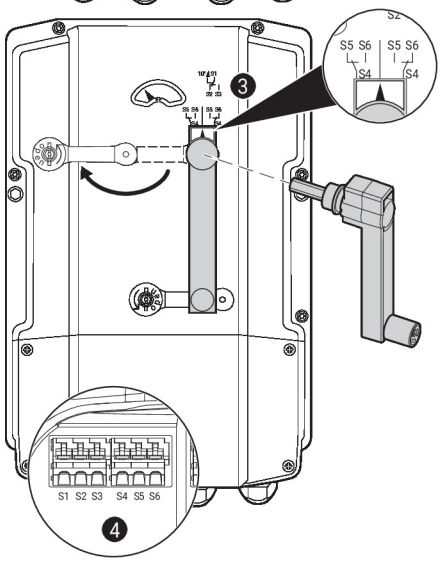

Auxiliary switch settings

> ⚠ **Note:** Perform settings on the actuator only in deenergised state.

For the auxiliary switch position settings, carry out points 1 to 4 successively.

1 Gear train disengagement
Opening the manual override cover and adjusting the hand crank.
Manual override is possible.

2 Manual override
Turn the hand crank until the desired switching position A is indicated and then remove the hand crank.

3 Auxiliary switch
Opening the auxiliary switch adjustment cover and adjusting the hand crank.
Turn the hand crank until the arrow points to the vertical line.

4 Terminals
Connect continuity tester to S4 + S5 or to S4 + S6.
If the auxiliary switch should switch in the opposite direction, rotate the hand crank by 180°.

Installation notes

Permissible installation orientation

The butterfly valves may be mounted upright to horizontal. The butterfly valves may not be installed in a hanging position i.e. with the spindle pointing downwards.

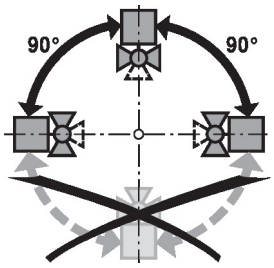

Installation situation

The two butterfly valves can be mounted in any combination on one T-piece.

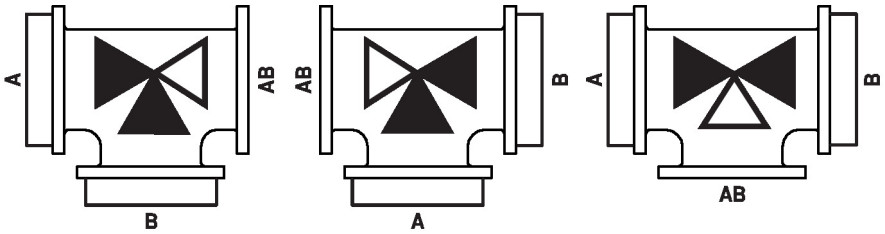

Water quality requirements

The water quality requirements specified in VDI 2035 must be adhered to.

Belimo valves are regulating devices. For the valves to function correctly in the long term, they must be kept free from particle debris (e.g. welding beads during installation work). The installation of a suitable strainer is recommended.

Servicing

Butterfly valves and rotary actuators are maintenance-free.

Before any service work on the control element is carried out, it is essential to isolate the rotary actuator from the power supply (by unplugging the electrical cable if necessary). Any pumps in the part of the piping system concerned must also be switched off and the appropriate slide valves closed (allow all components to cool down first if necessary and always reduce the system pressure to ambient pressure level).

The system must not be returned to service until the butterfly valve and the rotary actuator have been reassembled correctly in accordance with the instructions and the pipeline has been refilled by professionally trained personnel.

To avoid a torque increase during off season shut down, exercise the butterfly valve (full open and close) at least once a month.

Flow direction

Direction of flow in both directions possible.

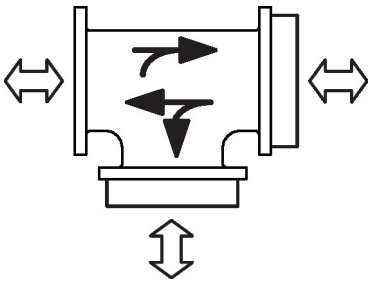

Installation notes

Flow setting

The Belimo butterfly valves have an approximate equal percentage characteristic curve of a 0...60% opening angle. Depending on the desired Kv value, the opening angle can be set with the Belimo Assistant App with a smartphone via Near Field Communication (NFC). Belimo butterfly valves can be ideally used as a control armature.

		10%	20%	30%	40%	50%	60%	70%	80%	90%	100%
DN 200	Kv (m3/h)	10	60	170	330	530	800	1120	1450	1690	1800
DN 250	Kv (m3/h)	10	100	280	520	830	1200	1760	2340	2800	3000
DN 300	Kv (m3/h)	30	150	400	700	1100	1700	2400	3300	4200	4700

The Kv values for 3-way valves are calculated values based on Kv values for 2-way valves, considering the pipe friction losses caused by a T-piece.

Configuration linear characteristic curve

The flow characteristic can be set to linear using Belimo Assistant 2.

The following table shows the respective Kv values in relation to the control signal (%).

		10%	20%	30%	40%	50%	60%	70%	80%	90%	100%
DN 200	Kv (m3/h)	180	360	540	720	900	1080	1260	1440	1620	1800
DN 250	Kv (m3/h)	300	600	900	1200	1500	1800	2100	2400	2700	3000
DN 300	Kv (m3/h)	470	940	1410	1880	2350	2820	3290	3760	4230	4700

The Kv values for 3-way valves are calculated values based on Kv values for 2-way valves, considering the pipe friction losses caused by a T-piece.

Configuration for various applications

The Belimo 3-way butterfly valve can flexibly be used for change-over and control applications. A specific configuration is necessary for each application.

Differential and close-off pressure

The maximum differential and close-off pressure of butterfly valves depends on diameter and type of the mounted actuator.

To ensure optimum operation and maximum service life, the maximum differential and close-off pressure must not be exceeded.

Please refer to the corresponding table of values in the notes for project planning.

Service

Using Belimo Assistant 2, device parameters can be modified. Belimo Assistant 2 can operate on a smartphone, tablet or PC. The available connection options vary depending on the hardware on which Belimo Assistant 2 is installed.

For more information about Belimo Assistant 2, refer to the Quick Guide – Belimo Assistant 2.

Service

Wireless connection

Belimo devices marked with the NFC logo can be accessed either directly with an NFC-capable smartphone or with a Bluetooth-capable smartphone connected to Belimo Assistant Link.

Requirement:

- NFC- or Bluetooth-capable smartphone or tablet
- Belimo Assistant 2 (Google Play and Apple App Store)

Align the NFC-capable smartphone or Belimo Assistant Link with the device's NFC logo so that both NFC antennas are superposed.

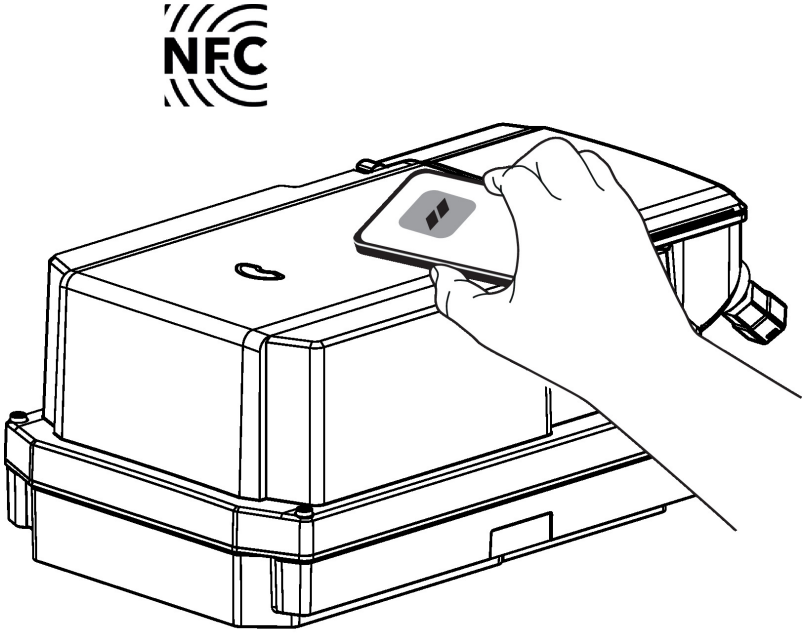

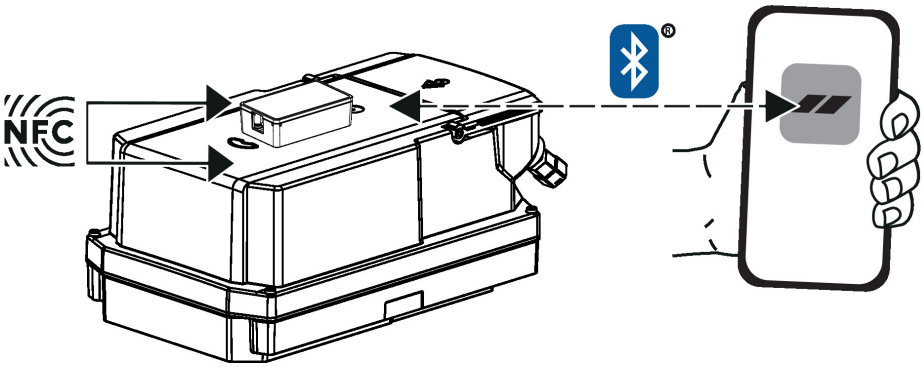

Service

Wired connection

Belimo devices can be accessed by connecting Belimo Assistant Link to the USB port on a PC or laptop and to the service socket or MP-Bus wire on the device.

Belimo Assistant 2 acts as MP client. Therefore, no other MP client shall be connected to the device.

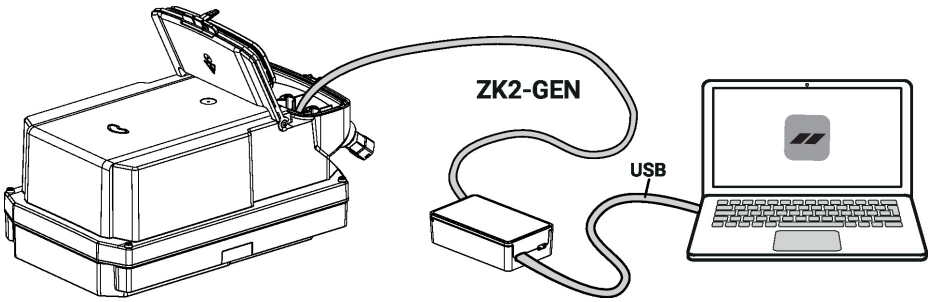

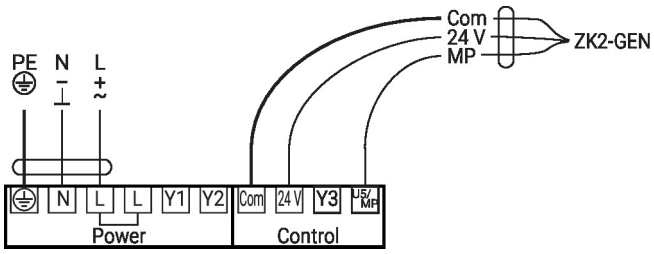

Dimensions

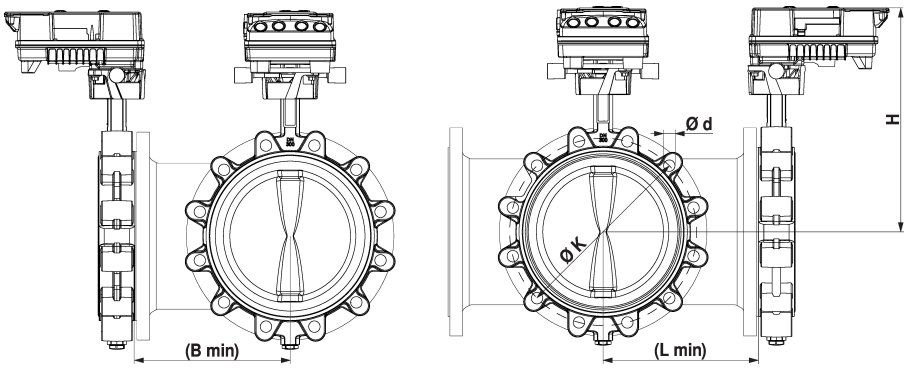

Type	DN	L [mm]	B [mm]	H [mm]	d (PN16) [mm]	K (PN16) [mm]	kg
D7200WL/BAC	200	260	260	400	12 x M20	295	51
D7250WL/BAC	250	300	300	450	12 x M24	355	76
D7300WL/BAC	300	340	340	500	12 x M24	410	100

Further documentation

- Data sheets for butterfly valves
- Data sheets for actuators
- Installation instructions for actuators and/or butterfly valves
- Notes for project planning for butterfly valves
- General notes for project planning
- Data sheet for T-piece
- Quick Guide – Belimo Assistant 2