Modulating rotary actuator fail-safe for adjusting dampers in technical building installations

- Air damper size up to approx. 6 m²
- Torque motor 30 Nm
- Nominal voltage AC/DC 24 V
- Control modulating 2...10 V
- Position feedback 2...10 V
- With 2 integrated auxiliary switches

Picture may differ from product

Technical data

Electrical data	Nominal voltage	AC/DC 24 V
	Nominal voltage frequency	50/60 Hz
	Nominal voltage range	AC 19.2...28.8 V / DC 21.6...28.8 V
	Power consumption in operation	7 W
	Power consumption in rest position	4.5 W
	Power consumption for wire sizing	12 VA
	Auxiliary switch	2x SPDT, 1x 10% / 1x 11...100%
	Switching capacity auxiliary switch	1 mA...3 A (0.5 A inductive), DC 5 V...AC 250 V
	Connection supply / control	Cable 1 m, 4x 0.75 mm², FRNC (halogen-free)
	Connection auxiliary switch	Cable 1 m, 6x 0.75 mm², FRNC (halogen-free)
	Parallel operation	Yes (note the performance data)
Functional data	Torque motor	30 Nm
	Torque fail-safe	30 Nm
	Operating range Y	2...10 V
	Input impedance	100 kΩ
	Position feedback U	2...10 V
	Position feedback U note	Max. 0.5 mA
	Position accuracy	±5%
	Direction of motion motor	selectable with switch L/R
	Direction of motion fail-safe	selectable by mounting L/R
	Manual override	by means of hand crank and locking switch
	Angle of rotation	Max. 95°
	Angle of rotation note	adjustable starting at 33% in 5% steps (with mechanical end stop)
	Running time motor	150 s / 90°
	Running time fail-safe	<20 s @ -20...50°C, <60 s @ -30°C
	Sound power level, motor	45 dB(A)
	Sound power level, fail-safe	71 dB(A)
	Mechanical interface	Universal shaft clamp 12...26.7 mm
	Position indication	Mechanical
	Service life	Min. 60'000 fail-safe positions
Safety data	Protection class IEC/EN	III, Safety Extra-Low Voltage (SELV)
	Protection class auxiliary switch IEC/EN	II, reinforced insulation
	Degree of protection IEC/EN	IP54
	EMC	CE according to 2014/30/EU
	Low voltage directive	CE according to 2014/35/EU
	Certification IEC/EN	IEC/EN 60730-1 and IEC/EN 60730-2-14
	Hygiene test	According to VDI 6022 Part 1

Technical data

Safety data	Type of action	Type 1.AA.B
	Rated impulse voltage supply / control	0.8 kV
	Rated impulse voltage auxiliary switch	2.5 kV
	Pollution degree	3
	Ambient humidity	Max. 95% RH, non-condensing
	Ambient temperature	-30...50°C [-22...122°F]
	Storage temperature	-40...80°C [-40...176°F]
	Servicing	maintenance-free
Weight	Weight	4.7 kg

Safety notes

- This device has been designed for use in stationary heating, ventilation and air-conditioning systems and must not be used outside the specified field of application, especially in aircraft or in any other airborne means of transport.
- Outdoor application: Only possible if no (sea) water, snow, ice, sunlight or aggressive gases act directly on the device and if it is ensured that the ambient conditions remain within the limit values specified in the data sheet at all times.
- Only authorised specialists may carry out installation. All applicable legal or institutional installation regulations must be complied with during installation.
- The device may only be opened at the manufacturer's site. It does not contain any parts that can be replaced or repaired by the user.
- Cables must not be removed from the device.
- To calculate the torque required, the specifications supplied by the damper manufacturers concerning the cross-section and the design, as well as the installation situation and the ventilation conditions must be observed.
- The two switches integrated in the actuator are to be operated either on mains voltage or on safety extra-low voltage. The combination mains voltage/safety extra-low voltage is not permitted.
- The device contains electrical and electronic components and must not be disposed of as household refuse. All locally valid regulations and requirements must be observed.

Product features

Operating mode
The actuator is connected with an analogue control signal Y (note the operating range) and drives the damper to the operating position at the same time as tensioning the return spring. The damper is turned back to the fail-safe position by spring force when the supply voltage is interrupted.

Simple direct mounting
Simple direct mounting on the damper shaft with a universal shaft clamp, supplied with an anti-rotation mechanism to prevent the actuator from rotating.

Shaft stabiliser
The shaft clamp of the spring-return actuator is factory-equipped with a shaft stabiliser for the stabilisation of the combination of damper, damper shaft and actuator.

This is comprised of two plastic support rings and must be left in place, partially, or completely removed, depending on the installation situation and the shaft diameter.

Manual override
By using the hand crank the damper can be actuated manually and engaged with the locking switch at any position. Unlocking is carried out manually or automatically by applying the operating voltage.

Adjustable angle of rotation
Adjustable angle of rotation with mechanical end stops.

High functional reliability
The actuator is overload protected and automatically stops when the end stop is reached.

Flexible signalling
The actuator has one auxiliary switch with a fixed setting and one adjustable auxiliary switch. They permit a 10% or 11...100% angle of rotation to be signaled.

Accessories

Electrical accessories	Description	Type
	Signal converter voltage/current 100 kΩ 4...20 mA, Supply AC/DC 24 V	Z-UIC
	Positioner for wall mounting	SGA24
	Positioner for built-in mounting	SGE24
	Positioner for front-panel mounting	SGF24
	Positioner for wall mounting	CRP24-B1

Mechanical accessories	Description	Type
	End stop indicator	IND-EFB
	Shaft clamp reversible, clamping range ø12...26.7 mm	K9-2
	Damper crank arm Slot width 8.2 mm, clamping range ø14...25 mm	KH10
	Actuator arm Slot width 8.2 mm	KH-EFB
	Mounting kit for linkage operation for flat and side installation	ZG-EFB
	Anti-rotation mechanism 230 mm, Multipack 20 pcs.	Z-ARS230
	Hand crank 63 mm	ZKN2-B

Electrical installation

Supply from isolating transformer.

Parallel connection of other actuators possible. Observe the performance data.

Wire colours:
1 = black
2 = red
3 = white
5 = orange
S1 = violet
S2 = red
S3 = white
S4 = orange
S5 = pink
S6 = grey

AC/DC 24 V, modulating

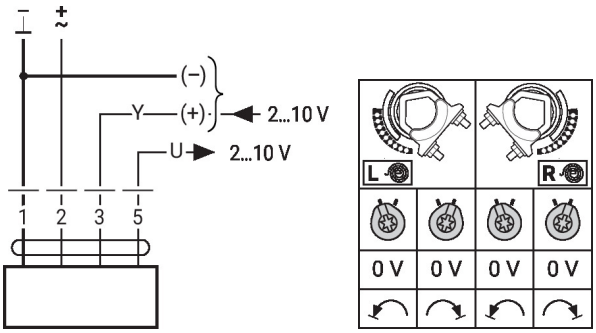

Auxiliary switch

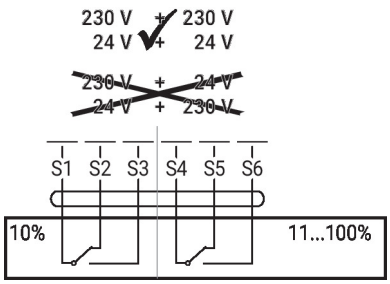

Operating controls and indicators

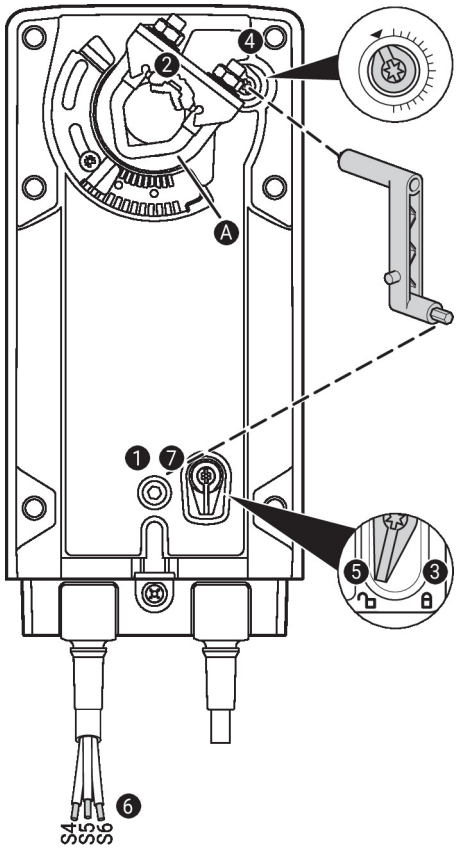

Auxiliary switch settings

Note: Perform settings on the actuator only in deenergised state.

For the auxiliary switch position settings, carry out points 1 to 7 successively.

1. **Manual override**
   Turn the hand crank until the desired switching position is set.
2. **Shaft clamp**
   Edge line A displays the desired switching position of the actuator on the scale.
3. **Fasten the locking device**
   Turn the locking switch to the „Locked padlock“ symbol.
4. **Auxiliary switch**
   Turn rotary knob until the notch points to the arrow symbol.
5. **Unlock the locking device**
   Turn the locking switch to the „Unlocked padlock“ symbol or unlock with the hand crank.
6. **Cable**
   Connect continuity tester to S4 + S5 or to S4 + S6.
7. **Manual override**
   Turn the hand crank until the desired switching position is set and check whether the continuity tester shows the switching point.

Installation notes

The shaft stabiliser must nevertheless be used with installation of the anti-rotation mechanism on the opposite side of the shaft clamp and a shaft diameter <20 mm.

Shaft stabiliser long shaft mounting

In the case of long shaft installation the use of the shaft stabiliser at a shaft diameter of

- 12...20 mm is necessary
- 21...26.7 mm is not necessary and can be removed

Shaft stabiliser short shaft mounting

In the case of short shaft installation, the necessity of the shaft stabiliser is dispensed with. It can be removed or – if the shaft length permits this – left in the shaft clamp.

Dimensions

Shaft length

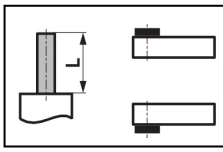	Min. 117
	Min. 20 mm [0.75"]

Clamping range

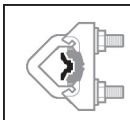	12...22	12...18
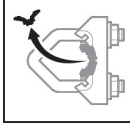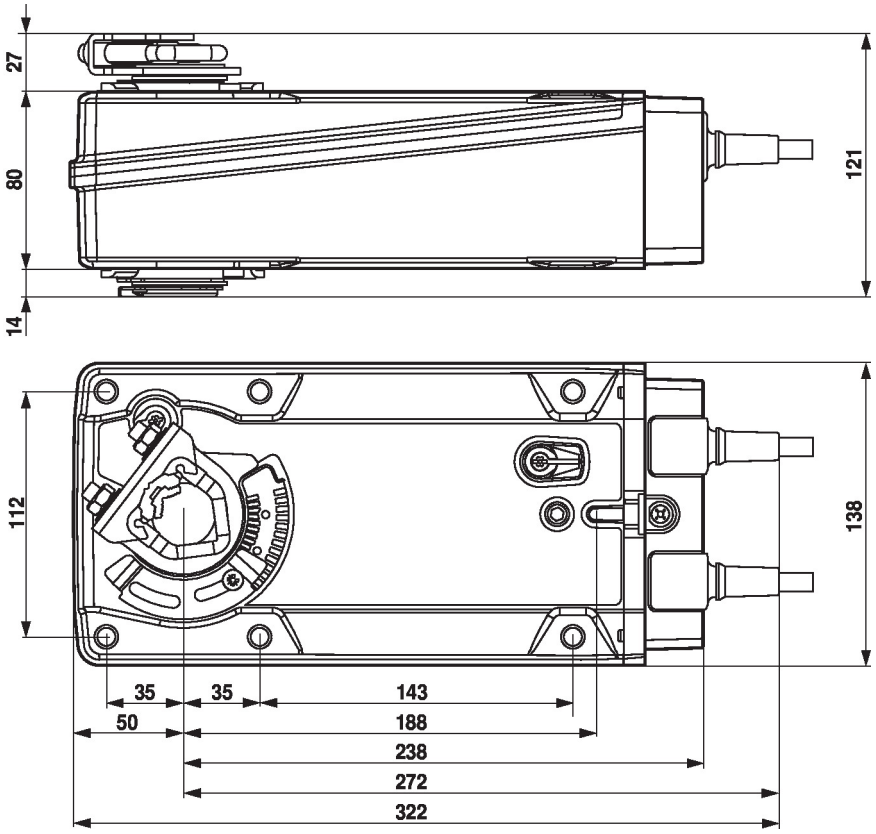	22...26.7	12...18