Open/close ball valve, 2-way, Internal thread

- For potable water applications
- ACS, DVGW, KIWA, PZH, WRAS, ÜA certified
- Lead-free (LF) and dezincification resistant (CR)
- Air-bubble tight

Picture may differ from product

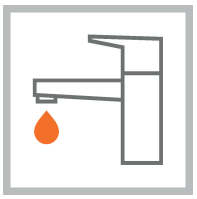

Type overview

Type	DN	Rp ["]	Kvs [m³/h]	PN
R215PW-N	15	1/2	16	40
R220PW-P	20	3/4	32	40
R225PW-Q	25	1	40	40
R232PW-Q	32	1 1/4	63	25
R240PW-R	40	1 1/2	100	25
R250PW-S	50	2	150	25

Technical data

Functional data	Potable water certificate	ACS DVGW KIWA PZH WRAS ÜA
	Fluid	Potable water
	Fluid temperature	5...100°C [41...212°F]
	Close-off pressure	Δps 1600 kPa
	Differential pressure	Δpmax 200 kPa (DN 15...25) Δpmax 170 kPa (DN 32...40) Δpmax 130 kPa (DN 50)
	Angle of rotation	90°
	Pipe connection	Internal thread according to ISO 7-1
	Installation orientation	upright to horizontal (in relation to the spindle)
	Servicing	maintenance-free
Materials	Valve body	Lead free and dezincification resistant (ISO 6509) brass (CW511L)
	Closing element	Lead free and dezincification resistant (ISO 6509) brass (CW511L), chrome-plated
	Spindle	Lead free and dezincification resistant (ISO 6509) brass (CW511L)
	Spindle seal	EPDM
	Seat	PTFE

Safety notes

- The ball valve must be moved at least once a week so that the quality and functionality of potable water are not affected.
- The valve has been designed for use in stationary potable water systems and must not be used outside the specified field of application, especially in aircraft or in any other airborne means of transport.
- Only authorised specialists may carry out installation. All applicable legal or institutional installation regulations must be complied with during installation.
- The valve does not contain any parts that can be replaced or repaired by the user.
- The valve may not be disposed of as household refuse. All locally valid regulations and requirements must be observed.
- When determining the flow rate characteristic of controlled devices, the recognised directives must be observed.

Product features

Operating mode

The open/close ball valve is adjusted by a rotary actuator. The rotary actuator is controlled by an open/close signal. Open the ball valve counterclockwise and close it clockwise.

Installation notes

Notes

The ball valve is a regulating device. To fulfil this control task in the long term, the circuit must be kept free from particle debris (e.g. welding beads during installation work).

Permissible installation orientation

The ball valve can be installed upright to horizontal. The ball valve may not be installed in a hanging position, i.e. with the spindle pointing downwards.

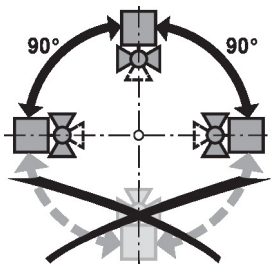

Servicing

Ball valves and rotary actuators are maintenance-free.

Before any service work on the control element is carried out, it is essential to isolate the rotary actuator from the power supply (by unplugging the electrical cable if necessary). Any pumps in the part of the piping system concerned must also be switched off and the appropriate slide valves closed (allow all components to cool down first if necessary and always reduce the system pressure to ambient pressure level).

The system must not be returned to service until the ball valve and the rotary actuator have been correctly reassembled in accordance with the instructions and the pipeline has been refilled by professionally trained personnel.

Flow direction

Please also ensure that the ball is in the correct position (marking on the spindle).

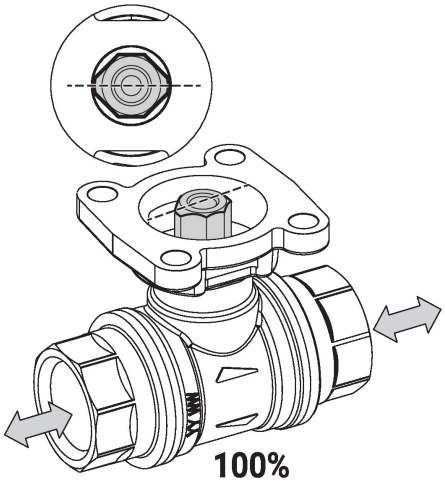

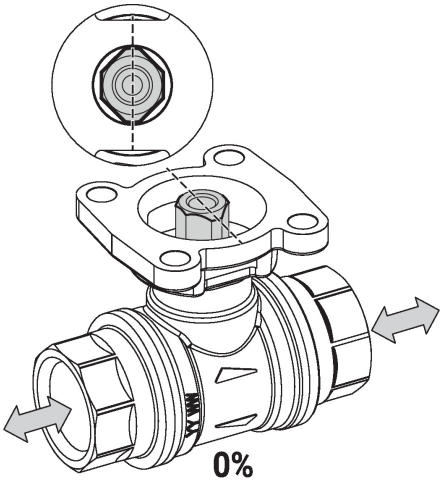

Dimensions

Dimensional drawings

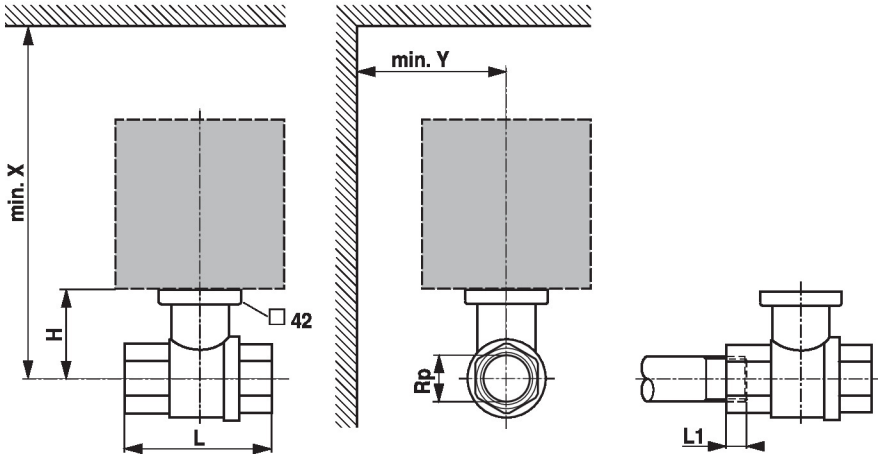

L1: Maximum screwing depth.
X/Y: Minimum distance with respect to the valve centre.
The actuator dimensions can be found on the respective actuator data sheet.

Type	DN	Rp ["]	L [mm]	L1 [mm]	H [mm]	X [mm]	Y [mm]	kg
R215PW-N	15	1/2	64.4	15.5	37.5	190	75	0.38
R220PW-P	20	3/4	68	17	40.8	195	75	0.47
R225PW-Q	25	1	85	21	44	200	75	0.69
R232PW-Q	32	1 1/4	97	23	50	235	80	1.0
R240PW-R	40	1 1/2	108	23	56	244	80	1.2
R250PW-S	50	2	125	26.5	63	255	80	1.9

Further documentation

- Data sheets for actuators
- Installation instructions for actuators and/or ball valves