Rotary actuator with fail-safe for ball valves and butterfly valves

- Torque motor 20 Nm
- Nominal voltage AC/DC 24 V
- Control Open/close
- Deenergised closed (NC)

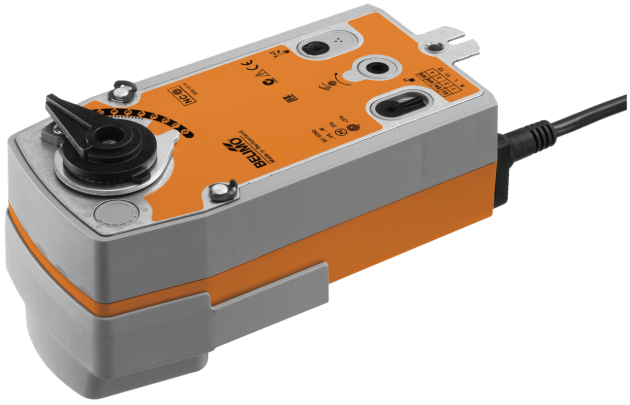

Picture may differ from product

Technical data

Electrical data	Nominal voltage	AC/DC 24 V
	Nominal voltage frequency	50/60 Hz
	Nominal voltage range	AC 19.2...28.8 V / DC 21.6...28.8 V
	Power consumption in operation	5.5 W
	Power consumption in rest position	1.5 W
	Power consumption for wire sizing	7.5 VA
	Connection supply / control	Cable 1 m, 2x 0.75 mm^2
	Parallel operation	Yes (note the performance data)
Functional data	Torque motor	20 Nm
	Torque fail-safe	20 Nm
	Direction of motion fail-safe	Deenergised NC, valve closed (A–AB = 0%)
	Direction of motion note	for valves with L-bore (A–AB = 100%)
	Manual override	by means of hand crank and locking switch
	Running time motor	75 s / 90°
	Running time fail-safe	<20 s @ -20...50°C, <60 s @ -30°C
	Sound power level, motor	45 dB(A)
	Position indication	Mechanical
	Service life	Min. 60'000 fail-safe positions
Safety data	Protection class IEC/EN	III, Safety Extra-Low Voltage (SELV)
	Power source UL	Class 2 Supply
	Degree of protection IEC/EN	IP54
	Degree of protection NEMA/UL	NEMA 2
	Housing	UL Enclosure Type 2
	EMC	CE according to 2014/30/EU
	Certification IEC/EN	IEC/EN 60730-1 and IEC/EN 60730-2-14
	UL Approval	cULus according to UL60730-1A, UL60730-2-14 and CAN/CSA E60730-1 The UL marking on the actuator depends on the production site, the device is UL-compliant in any case
	Type of action	Type 1.AA
	Rated impulse voltage supply / control	0.8 kV
	Pollution degree	3
	Ambient humidity	Max. 95% RH, non-condensing
	Ambient temperature	-30...50°C [-22...122°F]
	Storage temperature	-40...80°C [-40...176°F]
	Servicing	maintenance-free
Mechanical data	Connection flange	F05

Technical data

Weight	Weight	2.2 kg

Safety notes

- This device has been designed for use in stationary heating, ventilation and air-conditioning systems and must not be used outside the specified field of application, especially in aircraft or in any other airborne means of transport.
- Outdoor application: Only possible if no (sea) water, snow, ice, sunlight or aggressive gases act directly on the device and if it is ensured that the ambient conditions remain within the limit values specified in the data sheet at all times.
- Only authorised specialists may carry out installation. All applicable legal or institutional installation regulations must be complied with during installation.
- The device may only be opened at the manufacturer's site. It does not contain any parts that can be replaced or repaired by the user.
- Cables must not be removed from the device.
- The device contains electrical and electronic components and must not be disposed of as household refuse. All locally valid regulations and requirements must be observed.

Product features

Operating mode	The actuator moves the valve to the operating position at the same time as tensioning the return spring. The valve is turned back to the fail-safe position by spring force when the supply voltage is interrupted.
Simple direct mounting	Simple direct mounting on the rotary valve or butterfly valve with mounting flange. The mounting orientation in relation to the fitting can be selected in 90° steps.
Manual override	By using the hand crank the valve can be operated manually and engaged with the locking switch at any position. Unlocking is carried out manually or automatically by applying the operating voltage.
Adjustable angle of rotation	Adjustable angle of rotation with mechanical end stops.
High functional reliability	The actuator is overload protected, requires no limit switches and automatically stops when the end stop is reached.
Innovative motorisation	The actuator uses the powerful Belimo M600 microchip in combination with the INFORM method. It provides the full starting torque from a standstill with high precision (sensorless INFORM-Drive by Prof. Schrödl).

Electrical installation

Supply from isolating transformer.

Actuators may be connected in parallel if not mechanically linked. Power consumption and input impedance must be observed.

The cable cross-section (mm^2) must be determined on the basis of the actuator performance data (VA, W), the cable resistance, the number of actuators, and the total cable length according to electrotechnical principles. High voltage drops across the installation cables can affect the function of the actuator if, for example, the nominal voltage range (AC/DC) is not respected.

Wire colours:
1 = black
2 = red

Electrical installation

AC/DC 24 V, open/close

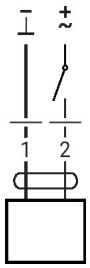

Dimensions

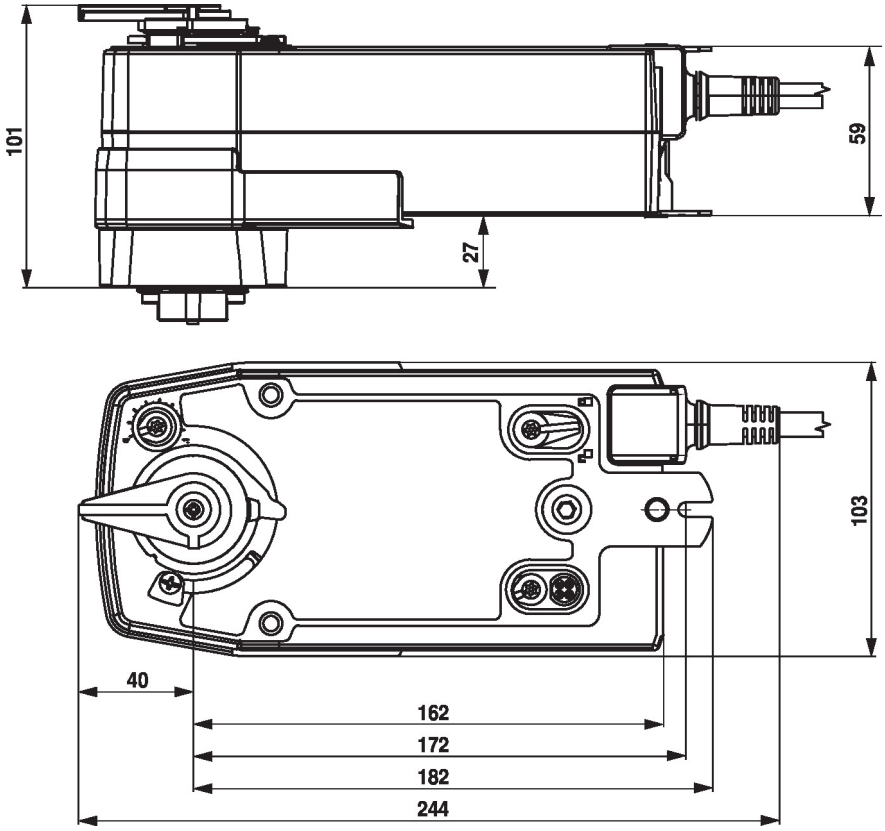

Further documentation

- The complete product range for water applications
- Data sheets for rotary valves and butterfly valves
- Installation instructions for actuators and/or rotary valves and butterfly valves
- General notes for project planning