Rotary actuator with fail-safe for ball valves

- Torque motor 20 Nm
- Nominal voltage AC/DC 24 V
- Control Open/close
- Deenergised open (NO)
- With 2 integrated auxiliary switches

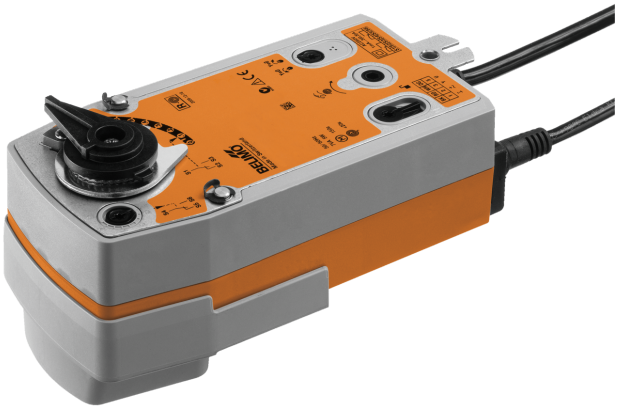

Picture may differ from product

Technical data

Electrical data	Nominal voltage	AC/DC 24 V
	Nominal voltage frequency	50/60 Hz
	Nominal voltage range	AC 19.2...28.8 V / DC 21.6...28.8 V
	Power consumption in operation	5.5 W
	Power consumption in rest position	1.5 W
	Power consumption for wire sizing	7.5 VA
	Auxiliary switch	2x SPDT, 1x 10% / 1x 11...100%
	Auxiliary switch note	1x 10% / 1x 11...100%
	Switching capacity auxiliary switch	1 mA...3 A (0.5 A inductive), DC 5 V...AC 250 V
	Connection supply / control	Cable 1 m, 2x 0.75 mm^2
	Connection auxiliary switch	Cable 1 m, 6x 0.75 mm^2
	Parallel operation	Yes (note the performance data)
Functional data	Torque motor	20 Nm
	Torque fail-safe	20 Nm
	Direction of motion fail-safe	Deenergised NO, valve open (A–AB = 100%)
	Direction of motion note	for valves with L-bore (A–AB = 0%)
	Manual override	by means of hand crank and locking switch
	Running time motor	75 s / 90°
	Running time fail-safe	<20 s @ -20...50°C, <60 s @ -30°C
	Sound power level, motor	45 dB(A)
	Position indication	Mechanical
	Service life	Min. 60'000 fail-safe positions
Safety data	Protection class IEC/EN	III, Safety Extra-Low Voltage (SELV)
	Power source UL	Class 2 Supply
	Protection class auxiliary switch IEC/EN	II, reinforced insulation
	Degree of protection IEC/EN	IP54
	Degree of protection NEMA/UL	NEMA 2
	Housing	UL Enclosure Type 2
	EMC	CE according to 2014/30/EU
	Low voltage directive	CE according to 2014/35/EU
	Certification IEC/EN	IEC/EN 60730-1 and IEC/EN 60730-2-14
	UL Approval	cULus according to UL60730-1A, UL60730-2-14 and CAN/CSA E60730-1 The UL marking on the actuator depends on the production site, the device is UL-compliant in any case
	Type of action	Type 1.AA.B
	Rated impulse voltage supply / control	0.8 kV
	Rated impulse voltage auxiliary switch	2.5 kV

Technical data

Safety data	Pollution degree	3
	Ambient humidity	Max. 95% RH, non-condensing
	Ambient temperature	-30...50°C [-22...122°F]
	Storage temperature	-40...80°C [-40...176°F]
	Servicing	maintenance-free
Weight	Weight	2.3 kg

Safety notes

- This device has been designed for use in stationary heating, ventilation and air-conditioning systems and must not be used outside the specified field of application, especially in aircraft or in any other airborne means of transport.
- Outdoor application: Only possible if no (sea) water, snow, ice, sunlight or aggressive gases act directly on the device and if it is ensured that the ambient conditions remain within the limit values specified in the data sheet at all times.
- Only authorised specialists may carry out installation. All applicable legal or institutional installation regulations must be complied with during installation.
- The device may only be opened at the manufacturer's site. It does not contain any parts that can be replaced or repaired by the user.
- Cables must not be removed from the device.
- The device contains electrical and electronic components and must not be disposed of as household refuse. All locally valid regulations and requirements must be observed.
- The two switches integrated in the actuator are to be operated either on mains voltage or on safety extra-low voltage. The combination mains voltage/safety extra-low voltage is not permitted.

Product features

Operating mode
The actuator moves the valve to the operating position at the same time as tensioning the return spring. The valve is turned back to the fail-safe position by spring force when the supply voltage is interrupted.

Simple direct mounting
Simple direct mounting on the ball valve with only one screw. The mounting orientation in relation to the ball valve can be selected in 90° steps.

Manual override
By using the hand crank the valve can be operated manually and engaged with the locking switch at any position. Unlocking is carried out manually or automatically by applying the operating voltage.

Adjustable angle of rotation
Adjustable angle of rotation with mechanical end stops.

High functional reliability
The actuator is overload protected, requires no limit switches and automatically stops when the end stop is reached.

Innovative motorisation
The actuator uses the powerful Belimo M600 microchip in combination with the INFORM method. It provides the full starting torque from a standstill with high precision (sensorless INFORM-Drive by Prof. Schrödl).

Flexible signalling
The actuator has one auxiliary switch with a fixed setting and one adjustable auxiliary switch. They permit a 10% or 11...100% angle of rotation to be signaled.

Electrical installation

Supply from isolating transformer.

Actuators may be connected in parallel if not mechanically linked. Power consumption and input impedance must be observed.

The cable cross-section (mm^2) must be determined on the basis of the actuator performance data (VA, W), the cable resistance, the number of actuators, and the total cable length according to electrotechnical principles. High voltage drops across the installation cables can affect the function of the actuator if, for example, the nominal voltage range (AC/DC) is not respected.

Wire colours:
1 = black
2 = red
S1 = violet
S2 = red
S3 = white
S4 = orange
S5 = pink
S6 = grey

AC/DC 24 V, open/close

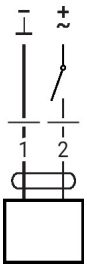

Auxiliary switch

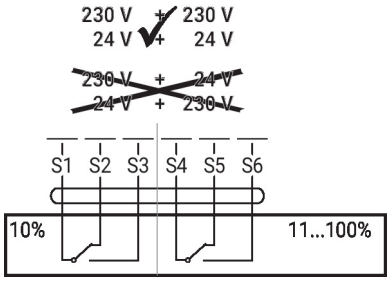

Operating controls and indicators

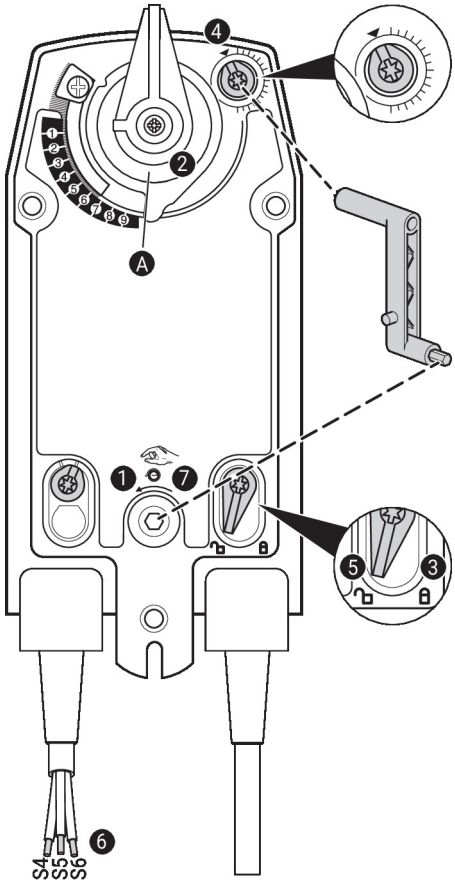

Auxiliary switch settings

Note: Perform settings on the actuator only in deenergised state.

For the auxiliary switch position settings, carry out points 1 to 7 successively.

1. **Manual override**
   Turn the hand crank until the desired switching position is set.
2. **Shaft clamp**
   Edge line A displays the desired switching position of the actuator on the scale.
3. **Fasten the locking device**
   Turn the locking switch to the „Locked padlock“ symbol.
4. **Auxiliary switch**
   Turn rotary knob until the notch points to the arrow symbol.
5. **Unlock the locking device**
   Turn the locking switch to the „Unlocked padlock“ symbol or unlock with the hand crank.
6. **Cable**
   Connect continuity tester to S4 + S5 or to S4 + S6.
7. **Manual override**
   Turn the hand crank until the desired switching position is set and check whether the continuity tester shows the switching point.

Dimensions

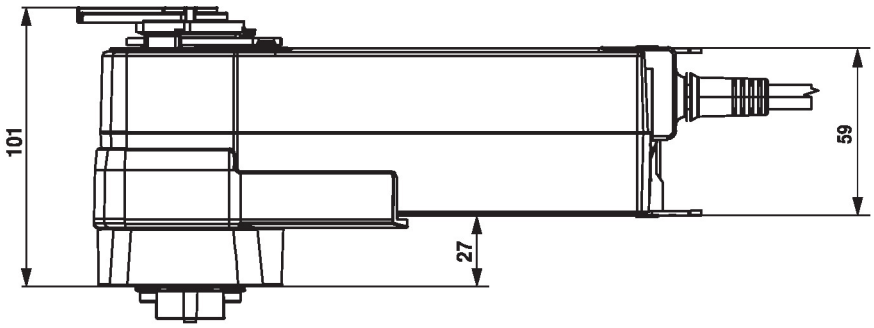

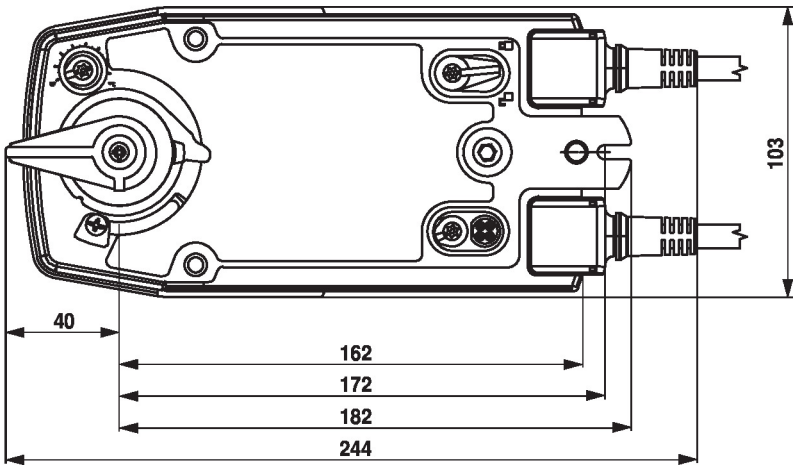

Further documentation

- The complete product range for water applications
- Data sheets for ball valves
- Installation instructions for actuators and/or ball valves
- General notes for project planning