Duct/Immersion sensor Temperature

Active sensor (0...10 V) for measuring temperature in duct applications. In combination with a stainless steel or brass thermowell which is also applicable for pipe applications. IP65 / NEMA 4X rated housing.

5 YEAR WARRANTY

Type Overview

Type	Output signal active temperature	Probe length	Probe diameter
22DT-12H	0...5 V, 0...10 V	50 mm	6 mm
22DT-12L	0...5 V, 0...10 V	100 mm	6 mm
22DT-12N	0...5 V, 0...10 V	150 mm	6 mm
22DT-12P	0...5 V, 0...10 V	200 mm	6 mm
22DT-12R	0...5 V, 0...10 V	300 mm	6 mm
22DT-12T	0...5 V, 0...10 V	450 mm	6 mm

Technical data

Electrical data	Nominal voltage	AC/DC 24 V
	Nominal voltage range	AC 21.6...26.4 V / DC 13.5...26.4 V
	Power consumption AC	0.8 VA
	Power consumption DC	0.4 W
	Electrical connection	Pluggable spring loaded terminal block max. 2.5 mm²
	Cable entry	Cable gland with strain relief ø6...8 mm
Functional data	Medium	Air Water
	Multirange	8 measuring ranges selectable
	Voltage output	1 x 0...5 V, 0...10 V, min. resistance 5 kΩ
	Output signal active note	Output 0...5/10 V with Jumper adjustable
Measuring data	Measured values	Temperature
Specification temperature active	Sensing element technology	Based on Pt1000 class AA
	Measuring range temperature settings	Active sensor: range selectable Attention: The maximum measuring range listed does not indicate the allowable fluid temperature for the sensor. Refer to safety data for the maximum fluid temperature limits.

Setting	Range [°C]	Range [°F]	Factory setting
S0	-50...50	-30...130	
S1	-10...120	0...250	
S2	0...50	40...140	
S3	0...250	30...480	
S4	-15...35	0...100	
S5	0...100	40...240	
S6	-20...80	40...90	
S7	0...160	0...150	✓

	Accuracy temperature	±0.5°C @ 21°C [±0.9°F @ 70°F] @ measuring range setting S2 and S4

Technical data

Specification temperature active	Long term stability	±0.04°C p.a. @ 21°C [±0.07°F p.a. @ 70°F]
	Time constant τ (63%) in water pipe	Typical 7 s with thermowell brass Typical 9 s with thermowell stainless steel
	Time constant τ (63%) in the air duct	Typical 46 s @ 3 m/s Typical 210 s @ 0 m/s
Safety data	Protection class IEC/EN	III, Protective Extra-Low Voltage (PELV)
	Power source UL	Class 2 Supply
	Degree of protection IEC/EN	IP65
	Degree of protection NEMA/UL	NEMA 4X
	Housing	UL Enclosure Type 4X
	EU Conformity	CE Marking
	Certification IEC/EN	IEC/EN 60730-1
	Quality Standard	ISO 9001
	UL Approval	cULus acc. to UL60730-1A/-2-9, CAN/CSA E60730-1/-2-9
	Type of action	Type 1
	Rated impulse voltage supply	0.8 kV
	Pollution degree	3
	Ambient humidity	Max. 95% RH, non-condensing
	Ambient temperature	-35...50°C [-30...120°F]
	Fluid temperature	-50...160°C [-60...320°F]
	Housing surface temperature	Max. 70°C [160°F]
Materials	Housing	Cover: PC, orange Bottom: PC, orange Seal: NBR70, black UV resistant
	Cable gland	PA6, black
	Probe material	V4A (1.4404)

Safety notes

This device has been designed for use in stationary heating, ventilation and air-conditioning systems and must not be used outside the specified field of application. Unauthorised modifications are prohibited. The product must not be used in relation with any equipment that in case of a failure may threaten humans, animals or assets.

Ensure all power is disconnected before installing. Do not connect to live/operating equipment.

Only authorised specialists may carry out installation. All applicable legal or institutional installation regulations must be complied with during installation.

The device contains electrical and electronic components and must not be disposed of as household refuse. All locally valid regulations and requirements must be observed.

Remarks

General remarks concerning sensors

When using lengthy connection wires (depending on the cross section used) the measuring result might be falsified due to a voltage drop at the common GND-wire (caused by the voltage current and the line resistance). In this case, 2 GND-wires must be wired to the sensor - one for supply voltage and one for the measuring current.

Sensing devices with a transducer should always be operated in the middle of the measuring range to avoid deviations at the measuring end points. The ambient temperature of transducer electronics should be kept constant. The transducers must be operated at a constant supply voltage (±0.2 V). When switching the supply voltage on/off, onsite power surges must be avoided.

Remarks

Remark: Occurring draft leads to a better carrying-off of dissipative power at the sensor. Thus temporally limited fluctuations might occur upon temperature measurement.

Build-up of self-heating by electrical dissipative power

Temperature sensors with electronic components always have a dissipative power which affects the temperature measurement of the ambient air. The dissipation in active temperature sensors shows a linear increase with rising operating voltage. The dissipative power should be taken into account when measuring temperature.

In case of a fixed operating voltage (±0.2 V), this is normally done by adding or reducing a constant offset value. As Belimo transducers work with a variable operating voltage, for reasons of production engineering only one operating voltage can be taken into consideration. Transducers 0...10 V / 4...20 mA have a standard setting at an operating voltage of DC 24 V. This means that at this voltage, the expected measuring error of the output signal will be the least. For other operating voltages, the offset error will be increased by a changing power loss of the sensor electronics.

If a readjustment directly at the active sensor should be necessary during later operation, this can be done with the following adjustment methods.

- For sensors with NFC or dongle with the corresponding Belimo app
- For sensors with a trimming potentiometer on the sensor board
- For bus sensors via bus interface with a corresponding software variable

Parts included

Description	Type
Mounting clip, with screws and adhesive foil	A-22D-A11

Accessories

Optional accessories

Description	Type
Mounting plate S housing	A-22D-A09
Connection adapter flex conduit, M20x1.5, for cable gland 1x 6 mm, Multipack 10 pcs.	A-22G-A01.1

Optional accessories air

Description	Type
Mounting flange for sensor probe 6 mm, up to max. 120°C [248°F], Plastic	A-22D-A03
Mounting flange for sensor probe 6 mm, up to max. 260°C, Brass	A-22D-A05

Recommended accessories water

Description	Type
Thermowell Stainless steel, 50 mm, G 1/2", SW27	A-22P-A06
Thermowell Brass, 50 mm, R 1/2", SW22	A-22P-A18
Thermal contact fluid	A-22P-A44
Compression fitting, Stainless steel, G 1/4" (external thread) for 6 mm, with cutting ring	A-22P-A45
Thermowell Stainless steel, 100 mm, G 1/2", SW27	A-22P-A08
Thermowell Brass, 100 mm, R 1/2", SW22	A-22P-A20
Cold barrier, Plastic, L 50 mm, for thermowell A-22P-A..	A-22P-A51
Adapter for Siemens thermowell	A-22P-A53
Thermowell Stainless steel, 150 mm, G 1/2", SW27	A-22P-A10
Thermowell Brass, 150 mm, R 1/2", SW22	A-22P-A22
Thermowell Stainless steel, 200 mm, G 1/2", SW27	A-22P-A12
Thermowell Brass, 200 mm, R 1/2", SW22	A-22P-A24
Thermowell Stainless steel, 300 mm, G 1/2", SW27	A-22P-A14
Thermowell Brass, 300 mm, R 1/2", SW22	A-22P-A26
Thermowell Stainless steel, 250 mm, G 1/2", SW27	A-22P-A29
Thermowell Brass, 250 mm, R 1/2", SW22	A-22P-A30
Thermowell Stainless steel, 450 mm, G 1/2", SW27	A-22P-A16
Thermowell Brass, 450 mm, R 1/2", SW22	A-22P-A28

Wiring diagram

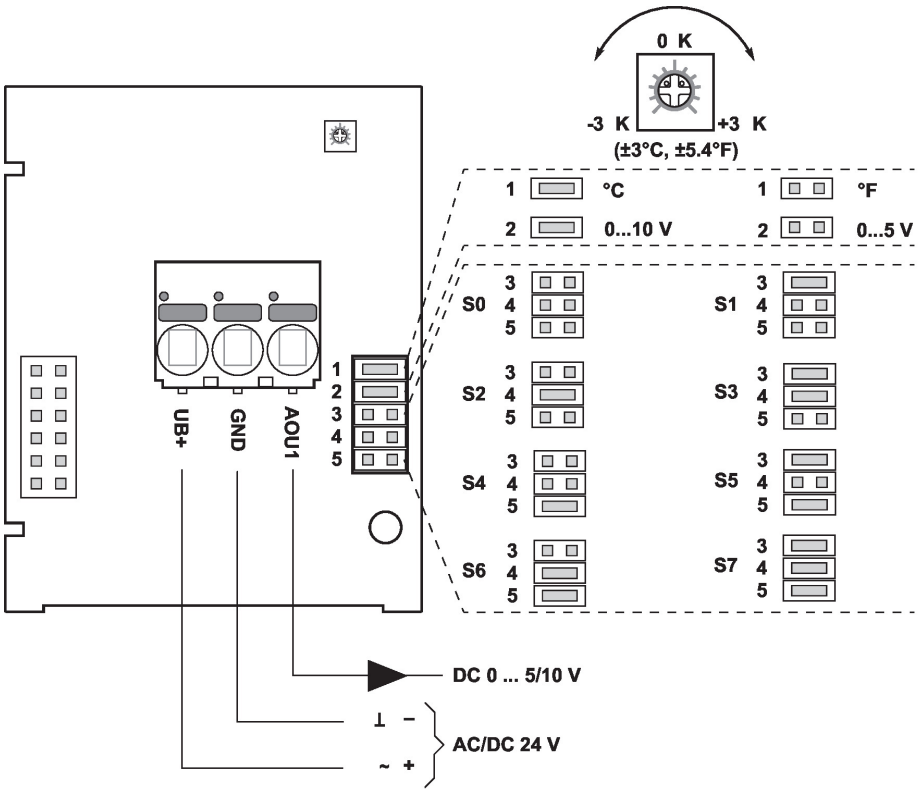

The following measuring ranges can be adjusted through the jumper settings:

Setting	Range [°C]	Range [°F]	Factory setting
S0	-50...50	-30...130	
S1	-10...120	0...250	
S2	0...50	40...140	
S3	0...250	30...480	
S4	-15...35	0...100	
S5	0...100	40...240	
S6	-20...80	40...90	
S7	0...160	0...150	✔

Dimensions

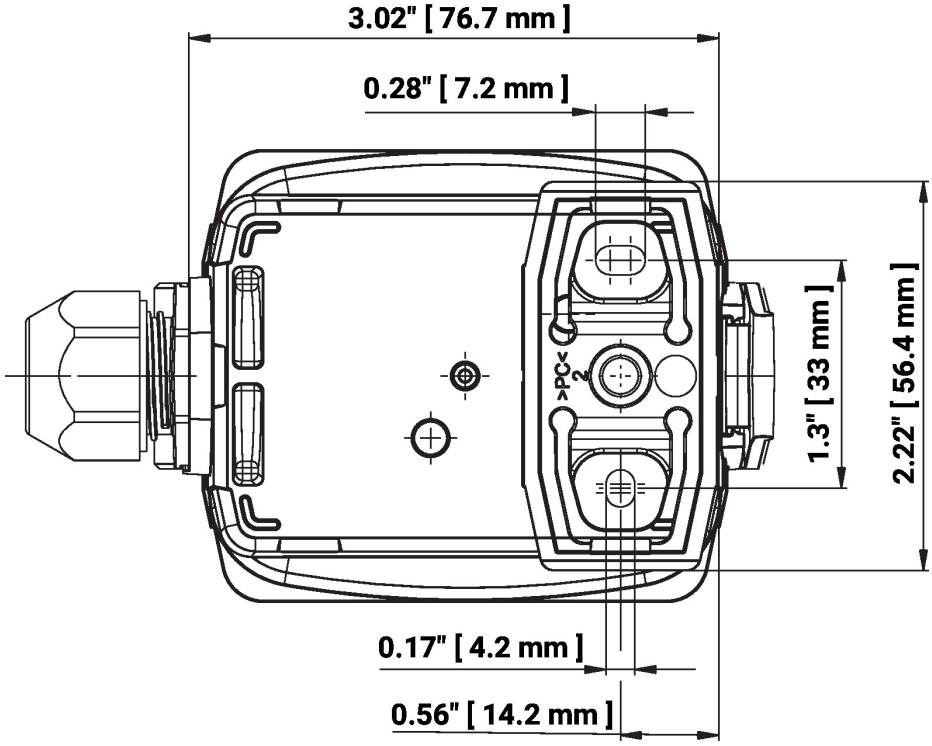

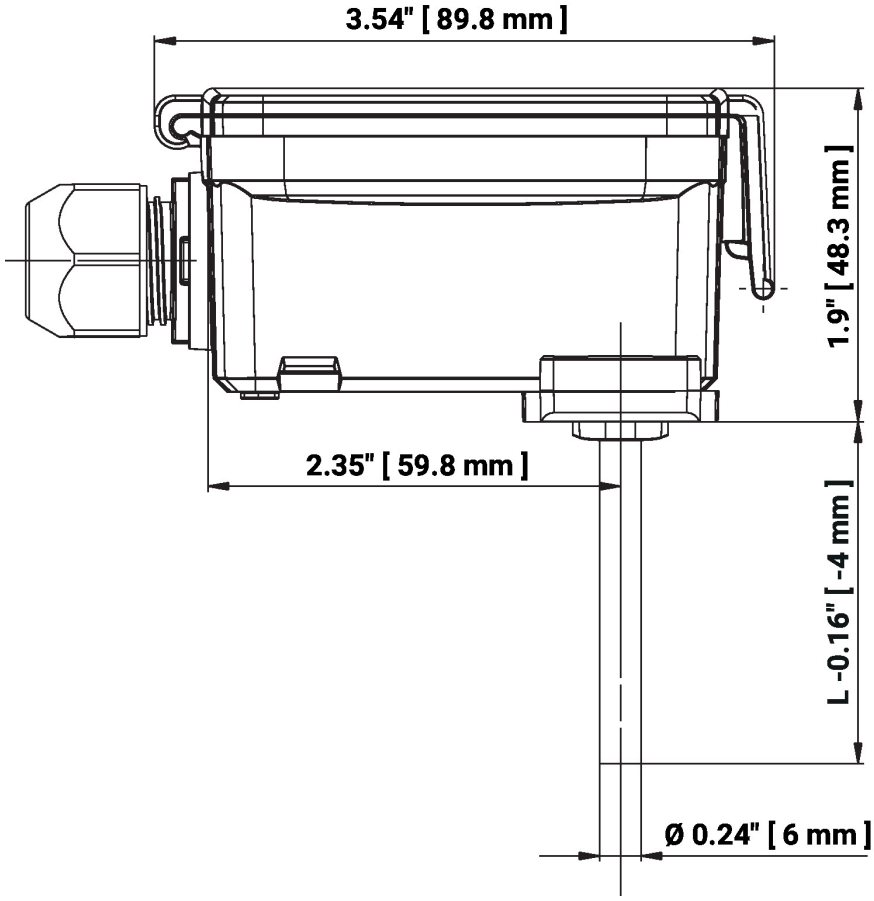

L = Probe length

Type	Probe length	Weight
22DT-12H	50 mm	0.12 kg
22DT-12L	100 mm	0.13 kg
22DT-12N	150 mm	0.13 kg
22DT-12P	200 mm	0.14 kg

Dimensions

Type	Probe length	Weight
22DT-12R	300 mm	0.15 kg
22DT-12T	450 mm	0.16 kg

Further documentation

- Installation instructions
- Sensor length calculator