Frost monitor

For monitoring the temperatures of water/air heaters in ventilation and air-conditioning systems to prevent frost damage to the cooling registers. Manual or automatic reset versions and adjustable setpoints. The frost alarm is provided with a single-pole double-throw (SPDT) changeover switch.

Type Overview

Type	Output signal frost protection switch	Additional features	Capillary
01ATS-104XC	Changeover	Manual reset	3 m
01ATS-105XC	Changeover	Manual reset	6 m
01ATS-1040B	Changeover	Auto reset	3 m
01ATS-1050B	Changeover	Auto reset	6 m

Technical data

Electrical data	Electrical connection	Spring loaded terminal max. 2.5 mm^2
	Cable entry	Cable gland with strain relief M20x1.5 mm, for cable ø6...12 mm
Functional data	Medium	Air
	Output signal frost protection switch note	AC 230 V 16 (2.5) A @ Switch position 1-2 AC 230 V 2 (0.4) A @ Switch position 1-4 DC 230 V 0.25 A
	Switching reliability	Min. switching current 100 mA @ AC / DC 24 V
Measuring data	Measured values	Temperature
Specification temperature active	Long term stability	2 K according to DIN EN 14597
Specification temperature passive	Measuring range	-10...15°C [15...60°F] Default setting: 5°C [41°F]
	Adjustment range	-10...15
	Switching differential	1.5 K (±1 K tolerance)
	Accuracy temperature	Setting accuracy: ±2 K
	Time constant τ (63%) in the air duct	Typical <25 s @ 1 m/s
Safety data	Degree of protection IEC/EN	IP65
	EU Conformity	CE Marking
	Quality Standard	ISO 9001
	Ambient humidity	Max. 95% RH, non-condensing
	Ambient temperature	-20...80°C [-4...175°F] The ambient temperature must exceed the switching point by +2 K.
	Fluid temperature	Up to max. 120°C
	Storage temperature	-30...80°C [-22...176°F]
Materials	Housing	Bottom: PA (RAL 7001, silver grey) Cover: ABS with inspection glass (PMMA) Seal: NBR
	Cable gland	PA6, black
	Capillary	Copper

Safety notes

This device has been designed for use in stationary heating, ventilation and air-conditioning systems and must not be used outside the specified field of application. Unauthorised modifications are prohibited. The product must not be used in relation with any equipment that in case of a failure may threaten humans, animals or assets.

Ensure all power is disconnected before installing. Do not connect to live/operating equipment.

Only authorised specialists may carry out installation. All applicable legal or institutional installation regulations must be complied with during installation.

The device contains electrical and electronic components and must not be disposed of as household refuse. All locally valid regulations and requirements must be observed.

During installation, testing, servicing and troubleshooting of this product, it may be necessary to work with live electrical components. Have a qualified licensed electrician or other individual who has been properly trained in handling live electrical components perform these tasks. Failure to follow all electrical safety precautions when exposed to live electrical components could result in death or serious injury.

Remarks

General remarks concerning sensors

The ambient temperature must exceed the switching point by +2 K.

For the switching function to be reliable, the ambient temperature at the housing must exceed the set switching point by more than 2 K.

Install the frost monitor inside the air duct if necessary in case of application in low ambient temperatures.

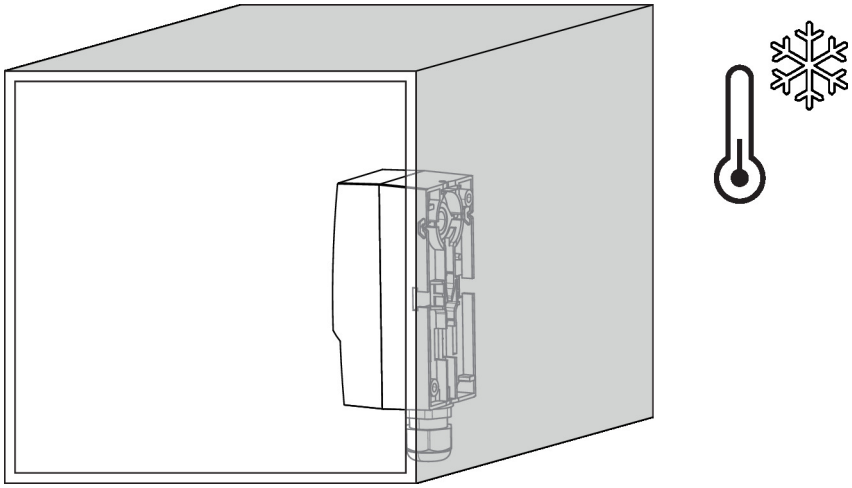

Switching function

If the capillary line falls below the entered setpoint value, over a length of 150 mm with 3 m, 300 mm with 6 m, then electrical circuit 1-2 is opened while electrical circuit 1-4 is closed due to the changeover function.

Remarks

Reset function

Auto reset

When the temperature rises, the microswitch is automatically switched back to its original position.

If the measuring system is destroyed (i.e. if the expansion fluid escapes) the pressure in the diaphragm drops and permanently opens electrical circuit 1-2 and closes electrical circuit 1-4.

Manual reset

The types with manual reset lock automatically when the temperature drops and can only be unlocked manually after the temperature has risen.

If the measuring system is destroyed (i.e. if the expansion fluid escapes) the pressure in the diaphragm drops and permanently opens electrical circuit 1-2 and closes electrical circuit 1-4.

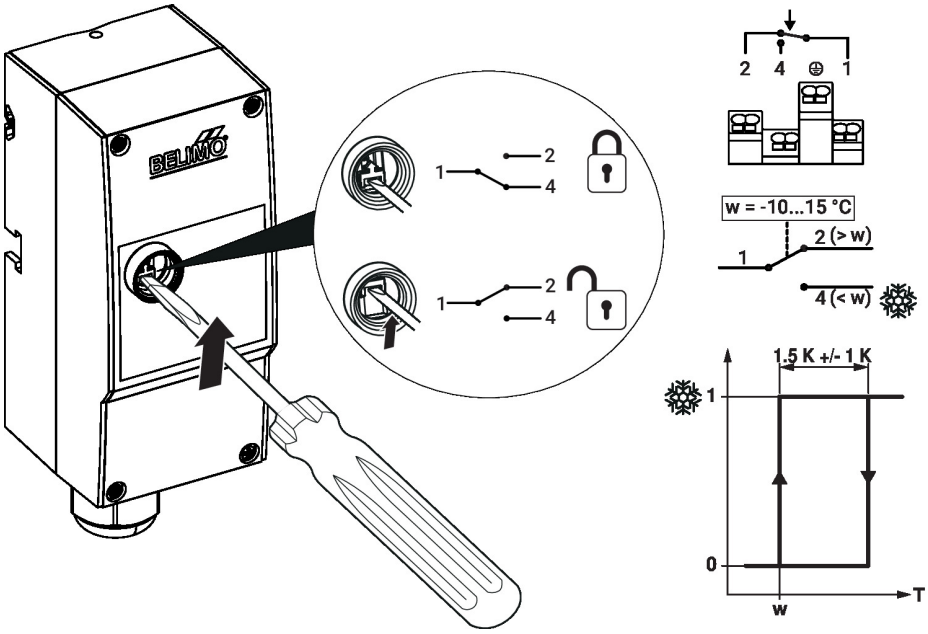

Parts included

Description	Type
Mounting kit, with 6 mounting brackets	A-22D-A08

Accessories

Optional accessories

Description	Type
Mounting kit, with 6 mounting brackets	A-22D-A08

Wiring diagram

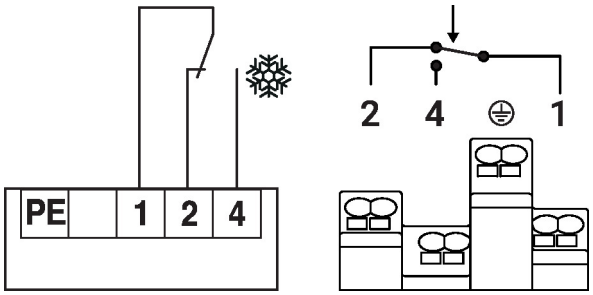

If the capillary leaks, the switch changes to the frost position.

Dimensions

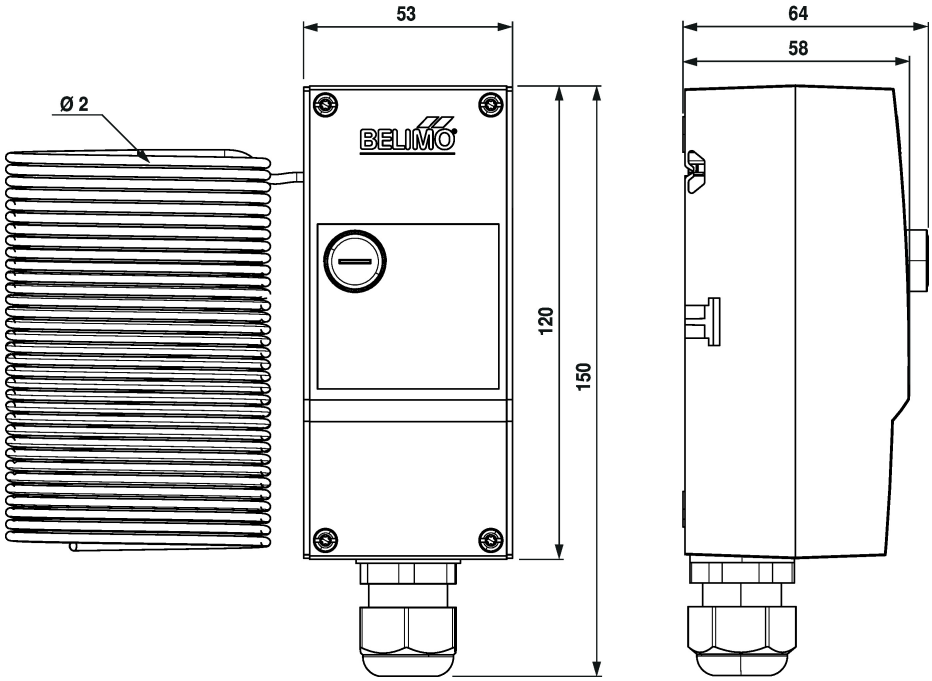

Type	Weight
01ATS-104XC	0.35 kg
01ATS-105XC	0.42 kg
01ATS-1040B	0.35 kg
01ATS-1050B	0.42 kg

Further documentation

- Installation instructions