Modulating short-stroke actuator for the motorisation of Siemens short-stroke globe valves in HVAC systems

- Actuating force 500 N
- Nominal voltage AC/DC 24 V
- Control modulating 0...10 V
- Stroke 5.5 mm

Picture may differ from product

## Technical data

| | | |
|---|---|---|
| **Electrical data** | Nominal voltage | AC/DC 24 V |
| | Nominal voltage frequency | 50/60 Hz |
| | Nominal voltage range | AC 19.2...28.8 V / DC 21.6...28.8 V |
| | Power consumption in operation | 1 W |
| | Power consumption for wire sizing | 2.5 VA |
| | Connection supply / control | Cable 1 m, 4x 0.75 $mm^2$ |
| | Parallel operation | Yes (note the performance data) |
| **Functional data** | Actuating force motor | 500 N |
| | Operating range Y | 0...10 V |
| | Input impedance | 100 kΩ |
| | Operating range Y variable | 2...10 V |
| | Position feedback U | 0...10 V |
| | Position feedback U note | Max. 1 mA |
| | Position accuracy | ±5% |
| | Manual override | temporary and permanent gear train disengagement with rotary knob on the housing |
| | Stroke | 5.5 mm |
| | Actuator fixing | G 3/4" |
| | Running time motor | 17 s / 5.5 mm |
| | Sound power level, motor | 58 dB(A) |
| | Duty cycle value | 75% (= active time 17 s / operating time 23 s) |
| | Position indication | Reversible scale plate |
| **Safety data** | Protection class IEC/EN | III, Safety Extra-Low Voltage (SELV) |
| | Degree of protection IEC/EN | IP40 |
| | EMC | CE according to 2014/30/EU |
| | Type of action | Type 1 |
| | Rated impulse voltage supply / control | 0.8 kV |
| | Pollution degree | 3 |
| | Ambient humidity | Max. 95% RH, non-condensing |
| | Ambient temperature | 0...50°C [32...122°F] |
| | Storage temperature | -30...80°C [-22...176°F] |
| | Servicing | maintenance-free |
| **Weight** | Weight | 0.41 kg |
| **Housing colours** | Housing cover | orange |
| | Housing base | black |

## Safety notes

- This device has been designed for use in stationary heating, ventilation and air-conditioning systems and must not be used outside the specified field of application, especially in aircraft or in any other airborne means of transport.
- Only authorised specialists may carry out installation. All applicable legal or institutional installation regulations must be complied with during installation.
- The actuator is to be protected against moisture. It is not suitable for outdoor applications.
- The device does not contain any parts that can be replaced or repaired by the user.
- The device contains electrical and electronic components and must not be disposed of as household refuse. All locally valid regulations and requirements must be observed.

## Product features

**Operating mode** The actuator is connected with an analogue control signal Y (note the operating range) and drives to the position defined.

**Simple direct mounting** Straightforward direct mounting on the valve with one knurled nut.

**Manual override** Manual override with lever possible. Temporary gear train disengagement by pushing the rotary knob. Permanent disengagement by pushing and simultaneous rotating the rotary knob clockwise 90°.

**High functional reliability** The actuator is overload protected and automatically stops when the end stop is reached.

## Electrical installation

**Supply from isolating transformer.**
**Parallel connection of other actuators possible. Observe the performance data.**
**The actuator is connected with an analogue control signal Y (note the operating range).**

**Wire colours:**
1 = black
2 = red
3 = white
5 = orange

AC/DC 24 V, modulating

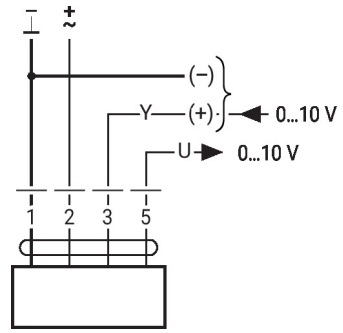

## Operating controls and indicators

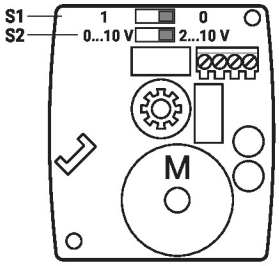


| S1 | | |
|---|---|---|
| 0 | 0 | Y = 0% |
| 1 | 1 | Y = 0% |

| S2 | |
|---|---|
| 2...10 V | 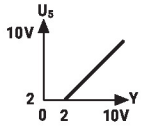  |
| 0...10 V | 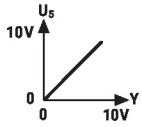  |
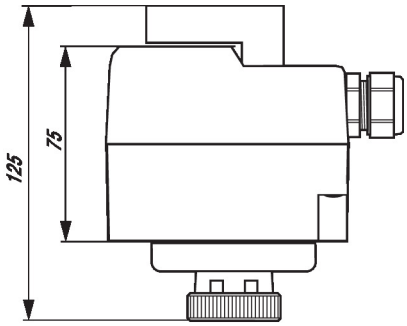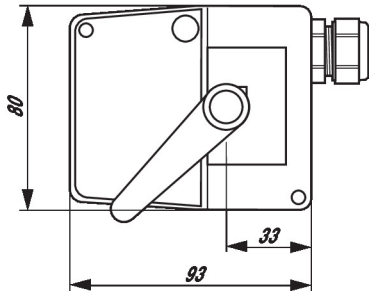
## Dimensions