Communicative globe valve actuator with fail-safe for 2-way and 3-way globe valves

- Actuating force 1000 N
- Nominal voltage AC/DC 24 V
- Control modulating, communicative 2...10 V variable
- Stroke 20 mm
- Communication via Belimo MP-Bus
- Conversion of sensor signals

Picture may differ from product

Technical data

Electrical data	Nominal voltage	AC/DC 24 V
	Nominal voltage frequency	50/60 Hz
	Nominal voltage range	AC 19.2...28.8 V / DC 21.6...28.8 V
	Power consumption in operation	2.5 W
	Power consumption in rest position	1.5 W
	Power consumption for wire sizing	6 VA
	Connection supply / control	Terminals with cable 1 m, 4x 0.75 mm², Terminal 4 mm²
	Parallel operation	Yes (note the performance data)
Data bus communication	Communicative control	MP-Bus
	Number of nodes	MP-Bus max. 8
Functional data	Actuating force motor	1000 N
	Operating range Y	2...10 V
	Input impedance	100 kΩ
	Operating range Y variable	Start point 0.5...30 V End point 2.5...32 V
	Operating modes optional	Open/close 3-point (AC only) Modulating (DC 0...32 V)
	Position feedback U	2...10 V
	Position feedback U note	Max. 0.5 mA
	Position feedback U variable	Start point 0.5...8 V End point 2.5...10 V
	Setting fail-safe position	Stem 0...100%, adjustable (POP rotary knob)
	Bridging time (PF)	2 s
	Bridging time (PF) variable	0...10 s
	Position accuracy	±5%
	Manual override	with push-button
	Stroke	20 mm
	Running time motor	150 s / 20 mm
	Running time motor variable	90...150 s
	Running time fail-safe	35 s / 20 mm
	Sound power level, motor	56 dB(A)
	Sound power level, fail-safe	45 dB(A)
	Adaptation setting range	manual (automatic on first power-up)
	Adaptation setting range variable	No action Adaptation when switched on Adaptation after pushing the manual override button

Technical data

Functional data	Override control	MAX (maximum position) = 100% MIN (minimum position) = 0% ZS (intermediate position, AC only) = 50%
	Override control variable	MAX = (MIN + 33%)...100% ZS = MIN...MAX
	Position indication	Mechanical, 5...20 mm stroke
Safety data	Protection class IEC/EN	III, Safety Extra-Low Voltage (SELV)
	Power source UL	Class 2 Supply
	Degree of protection IEC/EN	IP54
	Degree of protection NEMA/UL	NEMA 2
	Housing	UL Enclosure Type 2
	EMC	CE according to 2014/30/EU
	Certification IEC/EN	IEC/EN 60730-1 and IEC/EN 60730-2-14
	UL Approval	cULus according to UL60730-1A, UL60730-2-14 and CAN/CSA E60730-1 The UL marking on the actuator depends on the production site, the device is UL-compliant in any case
	Type of action	Type 1.AA
	Rated impulse voltage supply / control	0.8 kV
	Pollution degree	3
	Ambient humidity	Max. 95% RH, non-condensing
	Ambient temperature	0...50°C [32...122°F]
	Storage temperature	-40...80°C [-40...176°F]
	Servicing	maintenance-free
Weight	Weight	1.4 kg
Terms	Abbreviations	POP = Power off position / fail-safe position CPO = Controlled power off / controlled fail-safe PF = Power fail delay time / bridging time

Safety notes

- This device has been designed for use in stationary heating, ventilation and air-conditioning systems and must not be used outside the specified field of application, especially in aircraft or in any other airborne means of transport.
- Outdoor application: Only possible if no (sea) water, snow, ice, sunlight or aggressive gases act directly on the device and if it is ensured that the ambient conditions remain within the limit values specified in the data sheet at all times.
- Only authorised specialists may carry out installation. All applicable legal or institutional installation regulations must be complied with during installation.
- The switch for changing the direction of motion and so the closing point may be adjusted only by authorised specialists. The direction of motion is critical, particularly in connection with frost protection circuits.
- The device may only be opened at the manufacturer's site. It does not contain any parts that can be replaced or repaired by the user.
- The device contains electrical and electronic components and must not be disposed of as household refuse. All locally valid regulations and requirements must be observed.

Product features

Operating mode

Conventional operation:

The actuator is connected with an analogue control signal Y (note the operating range) and drives to the position defined at the same time as the integrated capacitors are loaded.

Interrupting the supply voltage causes the valve to be driven to the selected fail-safe position by means of stored electrical energy.

Operation on Bus:

The actuator receives its digital control signal from the higher level controller via the MP-Bus and drives to the position defined. Connection U serves as communication interface and does not supply an analogue measuring voltage.

Pre-charging time (start up)

The capacitor actuators require a pre-charging time. This time is used for charging the capacitors up to a usable voltage level. This ensures that, in the event of a power failure, the actuator can move at any time from its current position into the preset fail-safe position.

The duration of the pre-charging time depends mainly on following factors:

– Duration of the power failure

– PF delay time (bridging time)

Typical pre-charging time

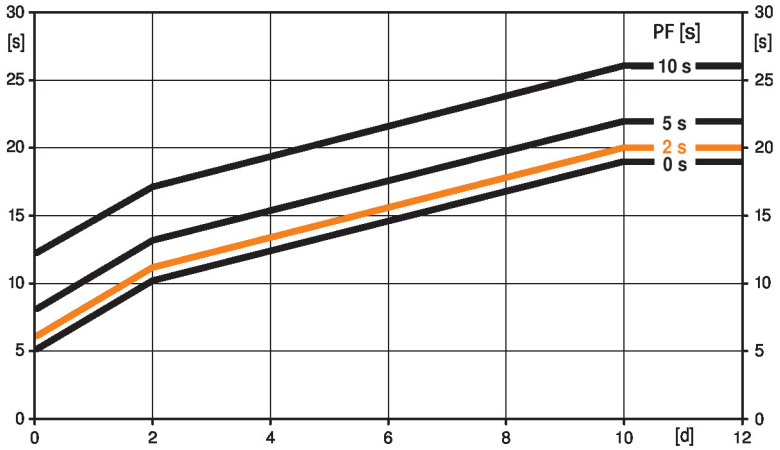

[d] = Power failure in days
[s] = Pre-charging time in seconds
PF[s] = Bridging time
Calculation example: Given a power failure of 3 days and a bridging time (PF) set at 5 s, the actuator requires a pre-charging time of 14 s after the power has been reconnected (see graphic).

PF [s]	[d]				
	0	1	2	7	≥10
0	5	8	10	15	19
2	6	9	11	16	20
5	8	11	13	18	22
10	12	15	17	22	26
	[s]				

Delivery condition (capacitors)

The actuator is completely discharged after delivery from the factory, which is why the actuator requires approximately 20 s pre-charging time before initial commissioning in order to bring the capacitors up to the required voltage level.

Bridging time

Power failures can be bridged up to a maximum of 10 s.

In the event of a power failure, the actuator will remain stationary in accordance with the set bridging time. If the power failure is greater than the set bridging time, the actuator will move into the selected fail-safe position.

The bridging time set at the factory is 2 s. It can be modified on site in operation by means of the Belimo service tool MFT-P.

Settings: The rotary knob must not be set to the "Tool" position!

For retroactive adjustments of the bridging time with the Belimo service tool MFT-P or with the ZTH EU adjustment and diagnostic device only the values need to be entered.

Product features

Setting fail-safe position (POP)

The rotary knob fail-safe position can be used to adjust the desired fail-safe position from 0...100% in 10% increments. The rotary knob refers to the adapted or programmed height of stroke. In the event of a power failure, the actuator will move to the selected fail-safe position, taking into account the bridging time (PF) of 2 s set at the factory.

Settings: The rotary knob must be set to the «Tool» position for retroactive settings of the fail-safe position with the Belimo service tool MFT-P. Once the rotary knob is set back to the range 0...100%, the manually set value will have positioning authority.

Converter for sensors

Connection option for a sensor (passive or active sensor or switching contact). The MP actuator serves as an analogue/digital converter for the transmission of the sensor signal via MP-Bus to the higher level system.

Configurable device

The factory settings cover the most common applications. Single parameters can be modified with Belimo Assistant 2.

Simple direct mounting

Simple direct mounting on the globe valve by means of form-fit hollow clamping jaws. The actuator can be rotated by 360° on the valve neck.

Manual override

Manual control with push-button possible - temporary. The gear train is disengaged and the actuator decoupled for as long as the button is pressed.

The stroke can be adjusted by using a hexagon socket screw key (4 mm), which is inserted into the top of the actuator. The stroke shaft extends when the key is rotated clockwise.

High functional reliability

The actuator is overload protected, requires no limit switches and automatically stops when the end stop is reached.

Position indication

The stroke is indicated mechanically on the bracket with tabs. The stroke range adjusts itself automatically during operation.

Home position

Factory setting: Actuator stem is retracted.

When valve-actuator combinations are shipped, the direction of motion is set in accordance with the closing point of the valve.

The first time the supply voltage is switched on, i.e. at the time of commissioning, the actuator carries out an adaptation, which is when the operating range and position feedback adjust themselves to the mechanical setting range.

The actuator then moves into the position defined by the control signal.

Adaptation and synchronisation

An adaptation can be triggered manually by pressing the "Adaptation" button or with Belimo Assistant 2. Both mechanical end stops are detected during the adaptation (entire setting range).

Automatic synchronisation after pressing the manual override button is configured. The synchronisation is in the home position (0%).

The actuator then moves into the position defined by the control signal.

A range of settings can be made using Belimo Assistant 2.

Setting direction of motion

When actuated, the direction-of-stroke switch changes the direction of motion in normal operation. The direction-of-stroke switch has no influence on the fail-safe position that has been set.

Accessories

Tools

Description	Type
Service tool for wired and wireless setup, on-site operation and troubleshooting.	Belimo Assistant 2
Belimo Assistant Link Bluetooth and USB to NFC and MP-Bus converter for configurable and communicative devices	LINK.10
Connecting cable 5 m, A: RJ11 6/4 LINK.10, B: 6-pin for connection to service socket	ZK1-GEN
Connecting cable 5 m, A: RJ11 6/4 LINK.10, B: free wire end for connection to MP/PP terminal	ZK2-GEN

Electrical accessories

Description	Type
Auxiliary switch 2x SPDT add-on	S2A-H

Accessories

	Description	Type
	MP-Bus power supply for MP actuators	ZN230-24MP
	Stem heater for LV.., NV.., SV.. actuator	ZH24-1-A
Gateways	**Description**	**Type**
	Gateway MP to BACnet MS/TP	UK24BAC
	Gateway MP to Modbus RTU	UK24MOD

Electrical installation

Supply from isolating transformer.

Parallel connection of other actuators possible. Observe the performance data.

Direction of stroke switch factory setting: Actuator stem retracted (▲).

Wire colours:
1 = black
2 = red
3 = white
5 = orange

MP-Bus

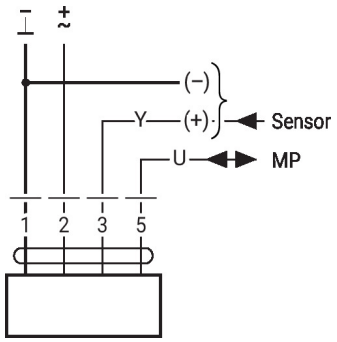

AC/DC 24 V, modulating

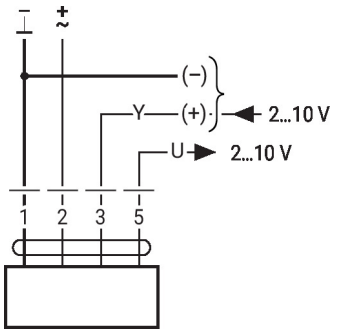

Further electrical installations

Functions with basic values (conventional mode)

Override control with AC 24 V with relay contacts

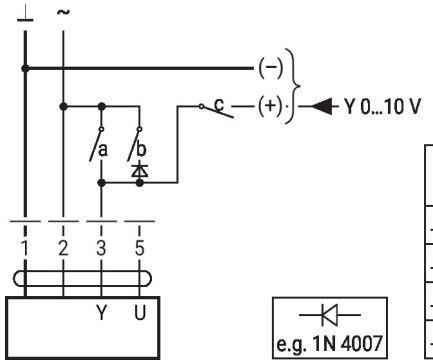

1	2	a	b	c	
⊥	⊥	–	–	–	0 %
⊥	⊥	–	⊥	–	ZS 50%
⊥	⊥	⊥	–	–	100%
⊥	⊥	–	–	⊥	Y

Override control with AC 24 V with rotary switch

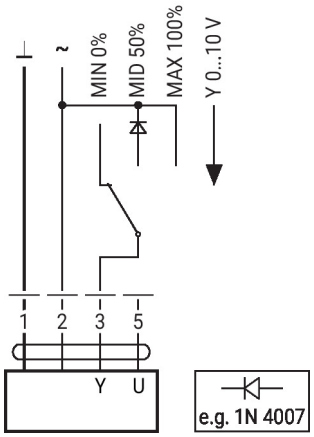

Further electrical installations

Functions with basic values (conventional mode)

Control remotely 0...100% with positioner SG..

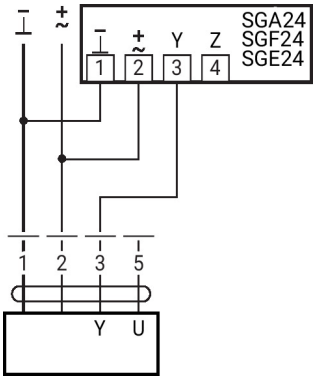

Minimum limit with positioner SG..

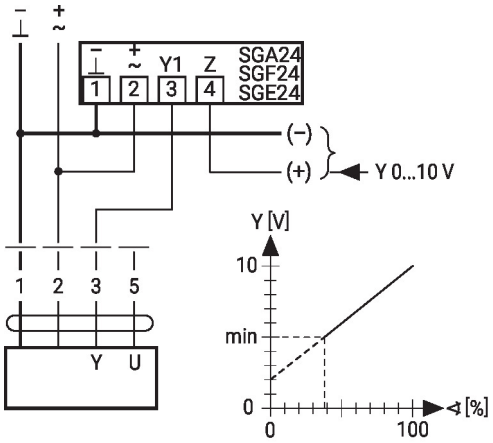

Primary/secondary operation (position-dependent)

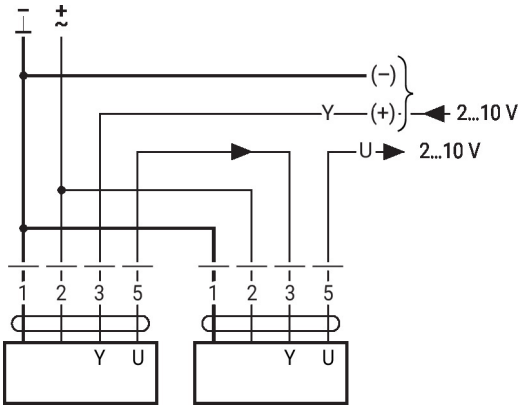

Control with 4...20 mA via external resistor

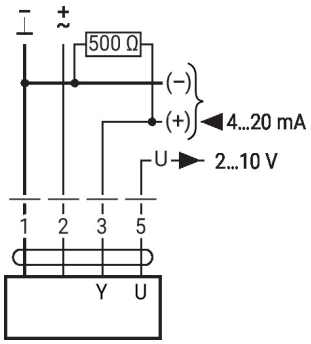

Caution:
The operating range must be set to DC 2...10 V.
The 500 Ohm resistor converts the 4...20 mA current signal to a voltage signal DC 2...10 V.

Functional check

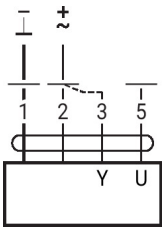

Procedure
1. Connect 24 V to connections 1 and 2
2. Disconnect connection 3:
– with direction of rotation L: Actuator rotates to the left
– with direction of rotation R: Actuator rotates to the right
3. Short-circuit connections 2 and 3:
– Actuator runs in opposite direction

Further electrical installations

MP-Bus

MP-Bus Network topology

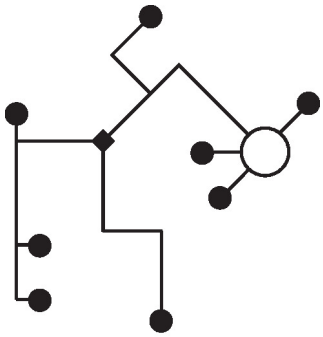

There are no restrictions for the network topology (star, ring, tree or mixed forms are permitted).
Supply and communication in one and the same 3-wire cable
• no shielding or twisting necessary
• no terminating resistors required

Connection on the MP-Bus

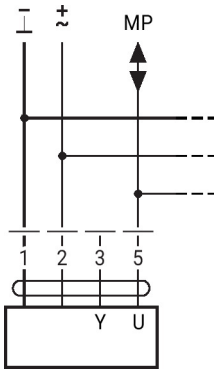

Max. 8 MP-Bus nodes

Connection of active sensors

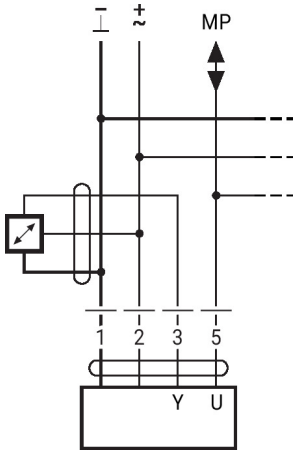

• Supply AC/DC 24 V
• Output signal 0...10 V (max. 0...32 V)
• Resolution 30 mV

Connection of external switching contact

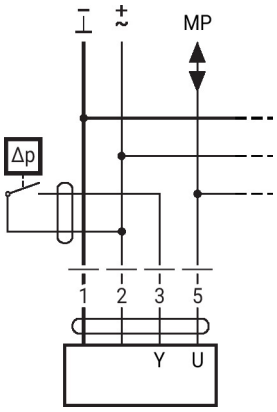

• Switching current 16 mA @ 24 V
• Start point of the operating range must be configured on the MP actuator as ≥0.5 V

Connection of passive sensors

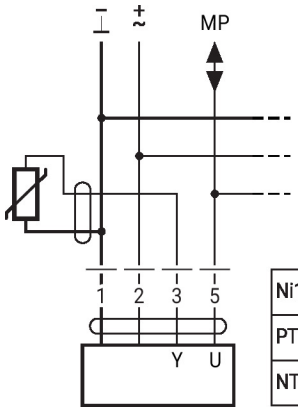

Ni1000	−28...+98°C	850...1600 Ω [2]
PT1000	−35...+155°C	850...1600 Ω [2]
NTC	−10...+160°C [1]	200 Ω...60 kΩ [2]

1) Depending on the type
2) Resolution 1 Ohm
Compensation of the measured value is recommended

Further electrical installations

Functions with specific parameters (configuration necessary)

Override control and limiting with AC 24 V with relay contacts

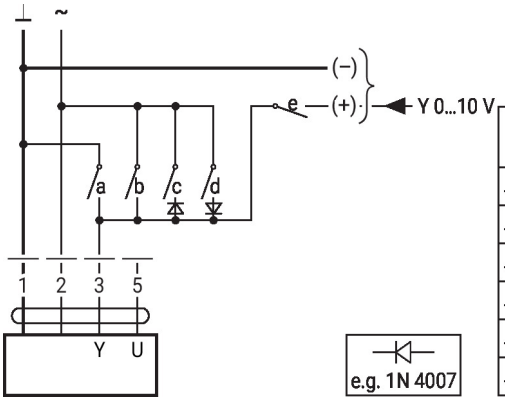

1	2	a	b	c	d	e	
⊸L	⊸L	⊸L	⊸–	⊸–	⊸–	⊸–	Close
⊸L	⊸L	⊸–	⊸–	⊸–	⊸–	⊸–	MIN
⊸L	⊸L	⊸–	⊸–	⊸L	⊸–	⊸–	ZS
⊸L	⊸L	⊸–	⊸L	⊸–	⊸–	⊸–	MAX
⊸L	⊸L	⊸–	⊸–	⊸–	⊸L	⊸–	Open
⊸L	⊸L	⊸–	⊸–	⊸–	⊸–	⊸L	Y

Control open/close

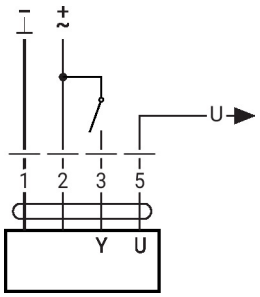

Control 3-point with AC 24 V

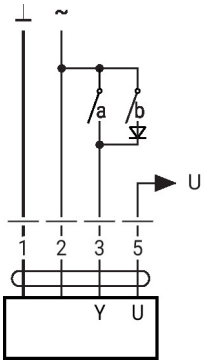

e.g. 1N 4007

1	2	3 (a)	3 (b)		
⊸L	⊸L	⊸L	⊸–	↓	↑
⊸L	⊸L	⊸L	⊸L	↓	↑
⊸L	⊸L	⊸–	⊸–	stop	stop
⊸L	⊸L	⊸–	⊸L	↑	↓

Override control and limiting with AC 24 V with rotary switch

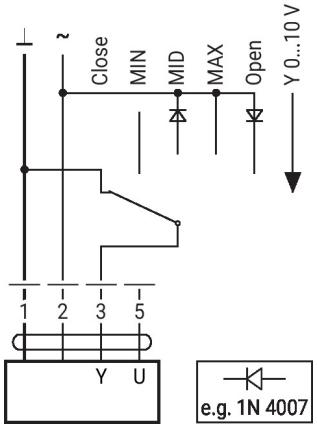

Caution:
The "Close" function is only guaranteed if the start point of the operating range is defined as min. 0.5 V.

Operating controls and indicators

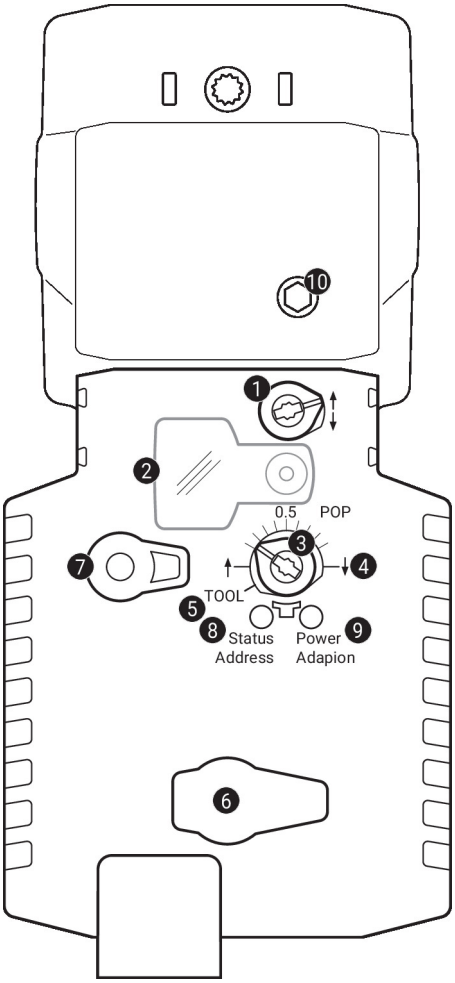

1 Direction-of-stroke switch

Switch over: Direction of stroke changes

2 Cover, POP button

3 POP button

4 Scale for manual adjustment

5 Position for adjustment with tool

6 Service plug
For connecting configuration and service tools

7 Manual override button

Press button: Gear train disengages, motor stops, manual override possible
Release button: Gear train engages, standard mode

8 Push-button (LED yellow)

Press button: Acknowledgment of addressing

9 Push-button (LED green)

Press button: Triggers stroke adaptation, followed by standard mode

10 Manual override

Clockwise: Actuator stem extends
Counterclockwise: Actuator stem retracts

LED displays

yellow 8	green 9	Meaning / function
Off	On	Operation OK
Off	Flashing	POP function active
On	Off	Fault
Off	Off	Not in operation
On	On	Adaptation process active
Flickering	On	MP-Bus communication active

Operating controls and indicators

Setting fail-safe position (POP)

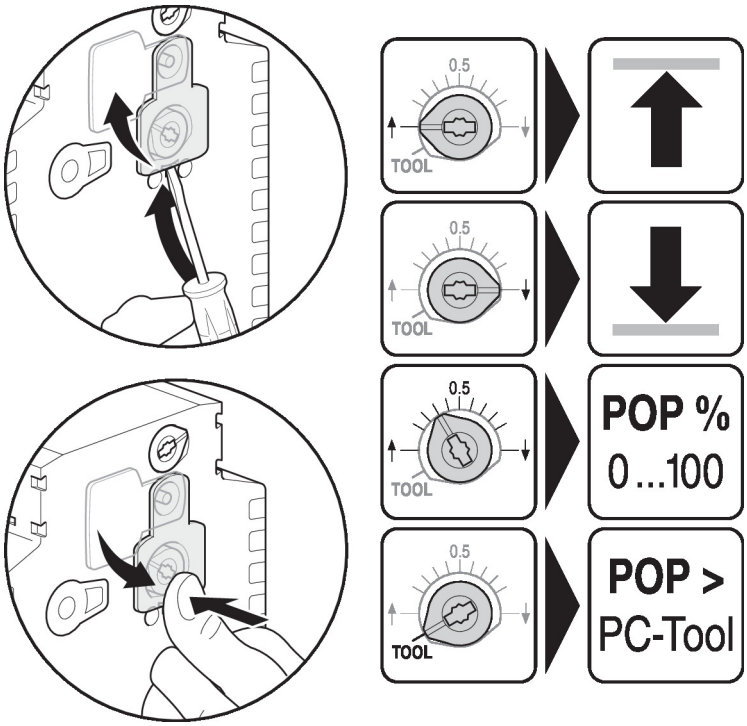

Service

Using Belimo Assistant 2, device parameters can be modified. Belimo Assistant 2 can operate on a smartphone, tablet or PC. The available connection options vary depending on the hardware on which Belimo Assistant 2 is installed.

For more information about Belimo Assistant 2, refer to the Quick Guide – Belimo Assistant 2.

Wired connection

Belimo devices can be accessed by connecting Belimo Assistant Link to the USB port on a PC or laptop and to the Service Socket or MP-Bus wire on the device.

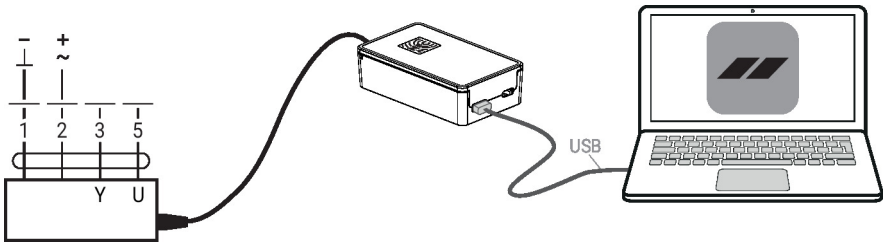

Dimensions

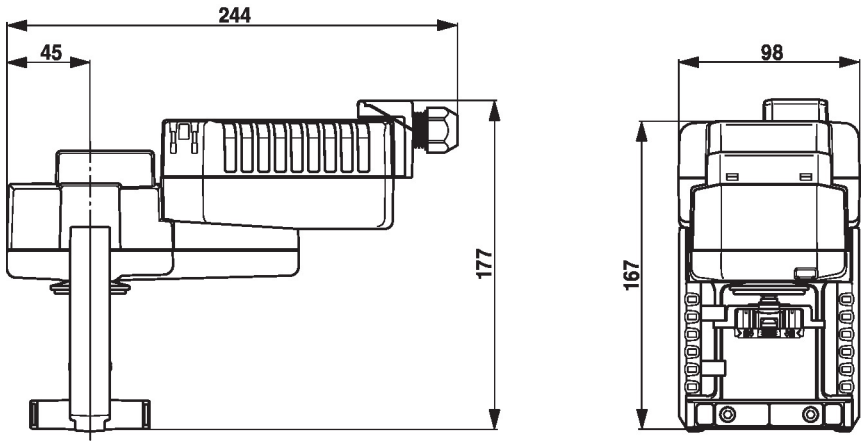

Further documentation

- The complete product range for water applications
- Installation instructions for actuators and/or globe valves
- Data sheets for globe valves
- Notes for project planning 2-way and 3-way globe valves
- General notes for project planning
- Tool connections
- Introduction to MP-Bus Technology
- Overview MP Cooperation Partners
- Quick Guide – Belimo Assistant 2