Modulating linear actuator for adjusting dampers and slide valves in technical building equipment

- Air damper size up to approx. 3 m²
- Actuating force 450 N
- Nominal voltage AC 100...240 V
- Control modulating 2...10 V
- Position feedback 2...10 V
- Length of Stroke Max. 100 mm, fixed setting

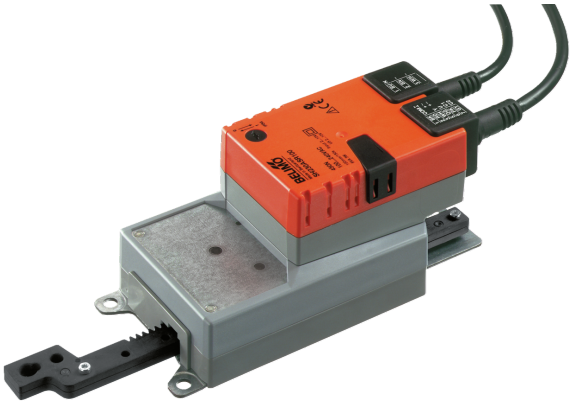

Picture may differ from product

Technical data

Electrical data	Nominal voltage	AC 100...240 V
	Nominal voltage frequency	50/60 Hz
	Nominal voltage range	AC 85...265 V
	Power consumption in operation	3 W
	Power consumption in rest position	1 W
	Power consumption for wire sizing	6 VA
	Connection supply	Cable 1 m, 2x 0.75 mm²
	Connection control	Cable 1 m, 4x 0.75 mm²
	Parallel operation	Yes (note the performance data)
Functional data	Actuating force motor	450 N
	Operating range Y	2...10 V
	Input impedance	100 kΩ
	Position feedback U	2...10 V
	Position feedback U note	Max. 1 mA
	Auxiliary supply	DC 24 V ±30%, max. 10 mA
	Position accuracy	±5%
	Direction of motion motor	selectable with switch
	Direction of motion note	Y = 0 V: with switch 0 (extended) / 1 (retracted)
	Manual override	with push-button, can be locked
	Stroke	100 mm
	Length of Stroke	Max. 100 mm, fixed setting
	Running time motor	150 s / 100 mm
	Sound power level, motor	52 dB(A)
Safety data	Protection class IEC/EN	II, reinforced insulation
	Protection class UL	II, reinforced insulation
	Degree of protection IEC/EN	IP54
	Degree of protection NEMA/UL	NEMA 2
	Housing	UL Enclosure Type 2
	EMC	CE according to 2014/30/EU
	Low voltage directive	CE according to 2014/35/EU
	Certification IEC/EN	IEC/EN 60730-1 and IEC/EN 60730-2-14

Technical data

Safety data	UL Approval	cULus according to UL60730-1A, UL60730-2-14 and CAN/CSA E60730-1 The UL marking on the actuator depends on the production site, the device is UL-compliant in any case
	Hygiene test	According to VDI 6022 Part 1 / SWKI VA 104-01, cleanable and disinfectable, low emission
	Type of action	Type 1
	Rated impulse voltage supply	4 kV
	Rated impulse voltage control	0.8 kV
	Pollution degree	3
	Ambient humidity	Max. 95% RH, non-condensing
	Ambient temperature	-30...50°C [-22...122°F]
	Storage temperature	-40...80°C [-40...176°F]
	Servicing	maintenance-free
Weight	Weight	1.2 kg

Safety notes

- This device has been designed for use in stationary heating, ventilation and air-conditioning systems and must not be used outside the specified field of application, especially in aircraft or in any other airborne means of transport.
- Outdoor application: only possible in case that no (sea) water, snow, ice, insolation or aggressive gases interfere directly with the device and that it is ensured that the ambient conditions remain within the thresholds according to the data sheet at any time.
- Caution: Mains voltage!
- Only authorised specialists may carry out installation. All applicable legal or institutional installation regulations must be complied with during installation.
- The device may only be opened at the manufacturer's site. It does not contain any parts that can be replaced or repaired by the user.
- The gear rod and the mechanical end stops must not be removed.
- The rotary supports and coupling pieces available as accessories must always be used if transverse forces are likely. In addition, the actuator must not be tightly bolted to the application. It must remain movable via the rotary support (refer to «Installation notes»).
- If the actuator is exposed to severely contaminated ambient air, appropriate precautions must be taken on the system side. Excessive deposits of dust, soot etc. can prevent the gear rod from being extended and retracted correctly.
- If not installed horizontally, the maual override button may only be actuated when there is no pressure on the gear rod.
- To calculate the actuating force required for air dampers and slide valves, the specifications supplied by the damper manufacturers concerning the cross- section and the design, as well as the installation situation and the ventilation conditions must be observed.
- If a rotary support and/or coupling piece is used, actuation force losses are to be expected.
- The device contains electrical and electronic components and must not be disposed of as household refuse. All locally valid regulations and requirements must be observed.

Product features

Operating mode The actuator is controlled with a control signal Y (note the operating range) and drives to the position defined by the control signal. Measuring voltage U serves for the electrical display of the damper position 0...100% and as control signal for other actuators.

Product features

Simple direct mounting
The actuator can be directly connected with the application using the enclosed screws. The head of the gear rod is connected to the moving part of the ventilating application individually on the mounting side or with the Z-KS1 coupling piece provided for this purpose.

Manual override
Manual override with push-button possible (the gear train is disengaged for as long as the button is pressed or remains locked).

High functional reliability
The actuator is overload protected, requires no limit switches and automatically stops when the end stop is reached.

Accessories

Electrical accessories

Description	Type
Signal converter voltage/current 100 kΩ 4...20 mA, Supply AC/DC 24 V	Z-UIC
Positioner for wall mounting	SGA24
Positioner for built-in mounting	SGE24
Positioner for front-panel mounting	SGF24
Positioner for wall mounting	CRP24-B1

Mechanical accessories

Description	Type
End stop kit, Multipack 20 pcs.	Z-AS1
Rotary support, for linear actuator, for compensation of transverse forces	Z-DS1
Coupling piece M8	Z-KS1

Electrical installation

Caution: Mains voltage!
Parallel connection of other actuators possible. Observe the performance data.

Wire colours:
1 = blue
2 = brown
1 = black
2 = red
3 = white
5 = orange

AC 230 V, modulating

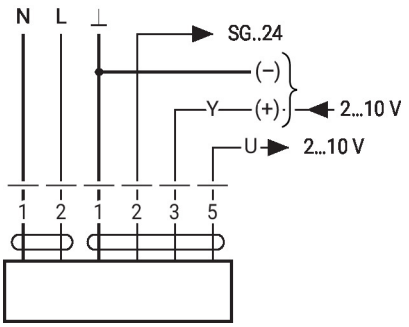

Auxiliary supply only for positioner SG..24

1 (N)	2 (L)	3	1 0	1 0
		2 V	↑	↓
		10 V	↓	↑

Installation notes

If a rotary support and/or coupling piece is used, losses in the actuation force losses are to be expected.

Installation notes

Applications without transverse forces

The linear actuator is screwed directly to the housing at three points. Afterwards, the head of the gear rod is fastened to the moving part of the ventilation application (e.g. damper or slide valve).

Applications with transverse forces

The coupling piece with the internal thread (Z-KS1) is connected to the head of the gear rod. The rotary support (Z-DS1) is screwed to the ventilation application. Afterwards, the linear actuator is screwed to the previously mounted rotary support with the enclosed screw. Afterwards, the coupling piece, which is mounted to the head of the gear rod, is attached to the moving part of the ventilating application (e.g. damper or slide valve). The transverse forces can be compensated for to a certain limit with the rotary support and/or coupling piece. The maximum permissible swivel angle of the rotary support and coupling piece is 10° (angle), laterally and upwards.

Stroke limitation

If the stroke limitations are used on the gear rod, the mechanical operating range on this side of the gear rod can be used starting with an extension length of 20 mm.
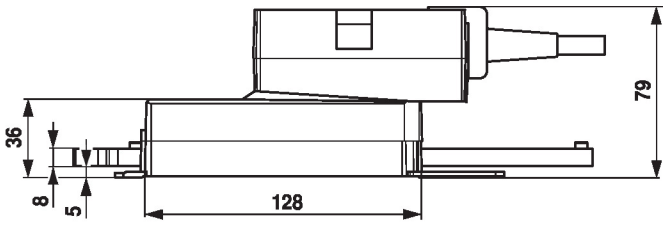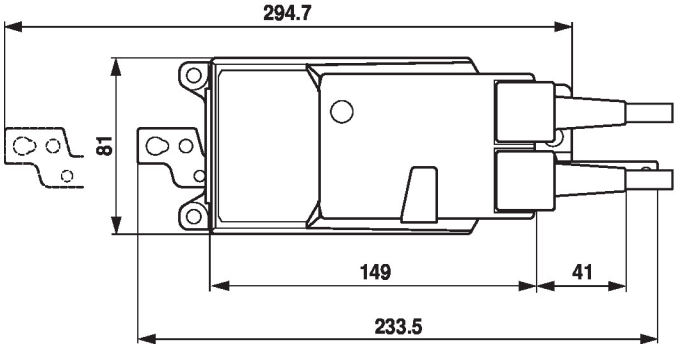
Dimensions