71898-00001.D

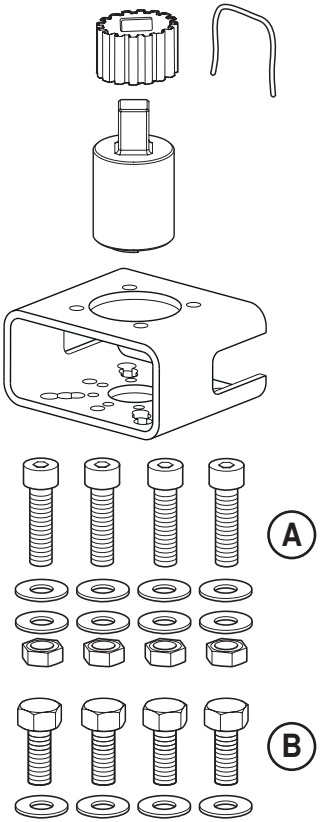

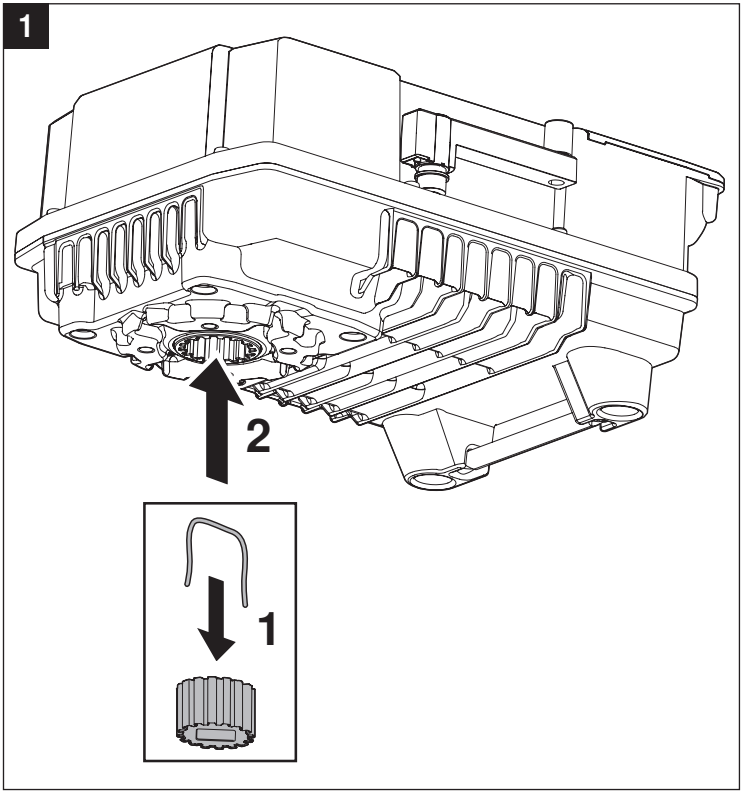

www.belimo.com/safety-notes

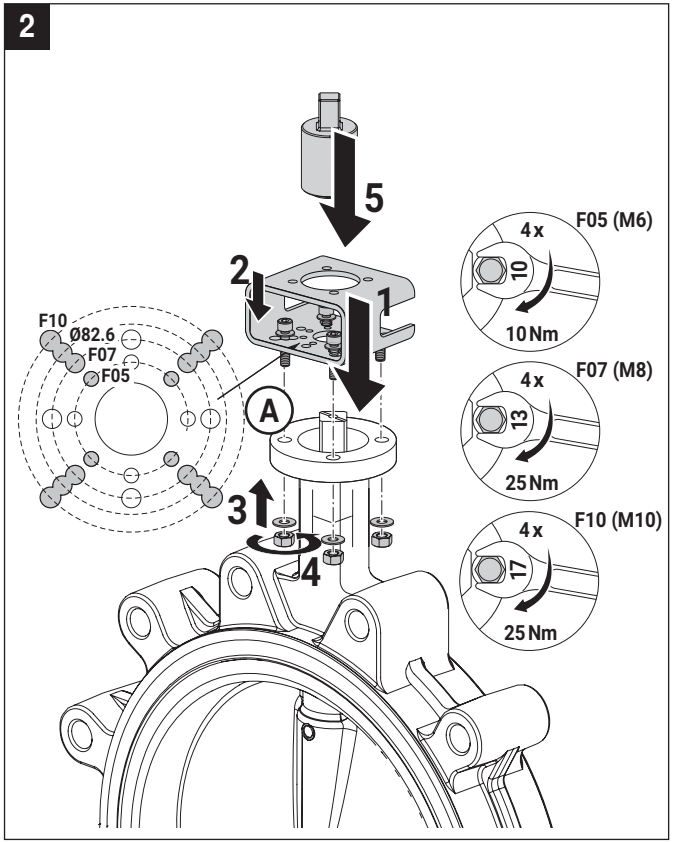
2
5
2
1
F10
Ø82.6
F07
F05
A
3
4
4 x
F05 (M6)
10
10 Nm
4 x
F07 (M8)
13
25 Nm
4 x
F10 (M10)
17
25 Nm

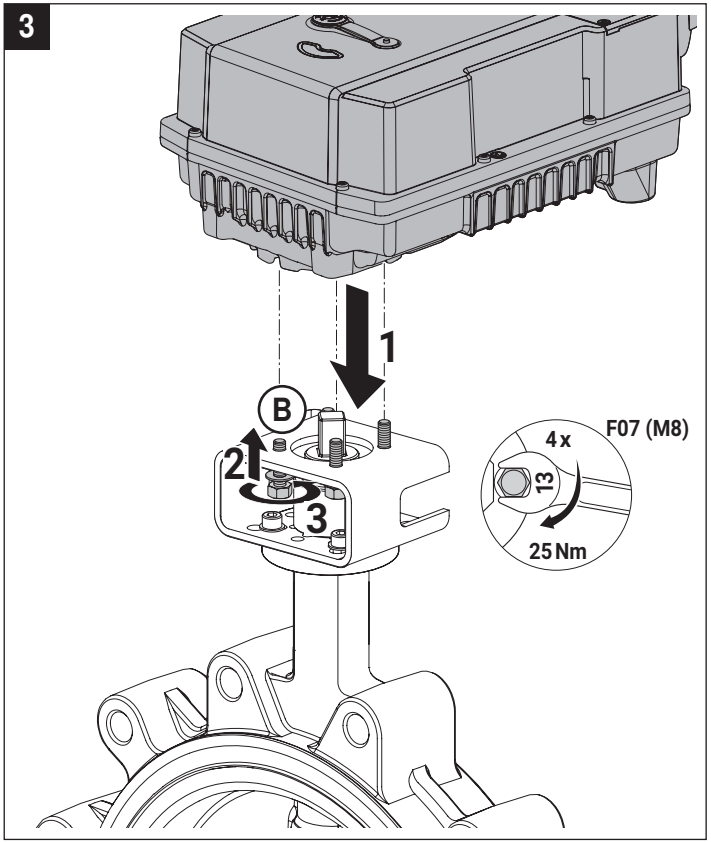
3
1
B
2
3
4 x
F07 (M8)
13
25 Nm