Room sensor / Room operating unit CO_2 / Humidity / Temperature

For measuring temperature, humidity and CO_2 in the room and for regulating the room temperature and/or ventilation. Thanks to MP-Bus communication and integrated analogue outputs, the room units can be seamlessly connected to existing third-party controllers. Commissioning and configuration of the device are conveniently done with Belimo Assistant 2. The end user can access the device via the Belimo Display App to read room values and to adjust setpoints.

Type Overview

Type	Communication	I/O	Measured values	Setpoint
22RTM-18-1	MP-Bus	3x AO	CO_2, Temperature, Relative humidity, Dew point	Temperature, Volumetric flow
22RTH-18-1	MP-Bus	3x AO	Temperature, Relative humidity, Dew point	Temperature, Volumetric flow
22RT-18-1	MP-Bus	3x AO	Temperature	Temperature, Volumetric flow

Technical data

Electrical data	Nominal voltage	AC/DC 24 V
	Nominal voltage range	AC 19.2...28.8 V / DC 19.2...28.8 V
	Power consumption AC	max. 1 VA (V output) max. 4 VA (mA output)
	Power consumption DC	max. 0.5 W (V output) max. 2 W (mA output)
	Electrical connection	Spring loaded terminal 0.2...2.5 mm^2
	Electrical connection note	Cable type USA and Canada: CL2 or higher
	Cable entry	Back side Top side Bottom side
Data bus communication	Communication	MP-Bus
	Number of nodes	MP-Bus max. 8 (16)
Functional data	Medium	Air
	Display	Belimo Display App The LED is used for the CO_2 TLF (traffic light function). The LED can be configured and deactivated via Belimo Assistant 2. (Type (P-)22RTM-..).
	Display type	Belimo Display App
	Input/Output	3x analogue output: 0...10 V (factory setting), 0...5 V, 2...10 V or 4...20 mA, selectable with Belimo Assistant 2
	Input/Output Note	V output: min. resistance 5 kΩ mA output: max. resistance 500 Ω
Measuring data	Measured values	CO_2 Relative humidity Dew point Temperature

Technical data

Specification CO_2	Sensing element technology	Non-dispersive infrared (NDIR) dual channel
	Measuring range	Default setting: 0...2000 ppm
	Accuracy	±(50 ppm + 2% of measured value)
	Long term stability	±20 ppm p.a.
Specification temperature active	Measuring range	0...50°C [32...122°F] (default setting)
	Accuracy temperature	±0.3°C @ 25°C [±0.5°F @ 77°F]
	Long term stability	±0.03°C p.a. @ 25°C [±0.05°F p.a. @ 77°F]
Specification Humidity	Measuring range	Default setting: 0...100% RH
	Measuring range dew point	Default setting: -50...50°C [-60...120°F]
	Accuracy	±2% between 0...90% RH @ 25°C
	Long term stability	±0.25% RH p.a. @ 25°C @ 50% RH
Safety data	Protection class IEC/EN	III, Safety Extra-Low Voltage (SELV)
	Power source UL	Class 2 Supply
	Degree of protection IEC/EN	IP30
	EU Conformity	CE Marking
	Quality Standard	ISO 9001
	UL Approval	cULus according to UL60730-1, CAN/CSA E60730-1
	Type of action	Type 1
	Rated impulse voltage supply	0.5 kV
	Pollution degree	2
	Ambient humidity	Max. 95% RH, non-condensing
	Ambient temperature	0...50°C [32...122°F]
	Storage temperature	-40...70°C [-40...160°F]
Materials	Housing	PC, white, RAL 9003 UL94V-0

Safety notes

This device has been designed for use in stationary heating, ventilation and air-conditioning systems and must not be used outside the specified field of application. Unauthorised modifications are prohibited. The product must not be used in relation with any equipment that in case of a failure may threaten humans, animals or assets.

Ensure all power is disconnected before installing. Do not connect to live/operating equipment.

Only authorised specialists may carry out installation. All applicable legal or institutional installation regulations must be complied with during installation.

The device contains electrical and electronic components and must not be disposed of as household refuse. All locally valid regulations and requirements must be observed.

Product Features

California title 24

The room units (P-)22RTM-18..-1 meet the requirements outlined in California Title 24, Part 6 for demand-controlled ventilation systems. Features such as the ability to record the highest CO_2 levels over the past 30 days are accessible via Belimo Assistant 2.

Product Features

Dynamic temperature compensation

Active temperature sensors with electronic components always have a thermal dissipation that influences the temperature measurement. The dissipative heat correlates with the level of the applied supply voltage and the levels of the analogue outputs.

Belimo room temperature sensors have adaptive temperature compensation, which reliably compensates for the device's self-heating for all permissible supply voltages and output levels. This ensures that the room temperature is recorded with maximum accuracy at all times.

CO_2 dual channel technology

All CO_2 sensors are subject to drift, which is caused by the ageing process of the components and requires regular calibration and adjustment or replacement of the sensors. The dual-channel technology minimises this drift by compensating for the majority of the ageing effects of the measuring channel through adjustment with a reference channel.

This makes it possible to use dual-channel sensors in applications with 24/7 occupancy. Regular calibration with fresh outdoor air, as is the case with sensors with ABC logic, is not necessary with dual-channel sensors. It is recommended to recalibrate the sensor after 5 years of operation.

Remarks

General remarks concerning sensors

The measuring result is influenced by the thermal characteristics of the wall. A solid concrete wall responds to thermal fluctuations within a room more slowly than a light-weight structure wall. A room sensor always detects a mixture of air and wall temperature. This means that the radiant heat of the wall, which is important for comfort, is also included in the measurement result.

Remark: Occurring draft leads to a better carrying-off of dissipative power at the sensor. Thus temporally limited fluctuations might occur upon temperature measurement.

Application notice for humidity sensors

The humidity sensor is extremely sensitive. Touching the sensor element or exposing it to aggressive substances like chlorine, ozone, ammonia, hydrogen peroxide or ethanol (i.e. as a cleaning agent) may affect the measurement accuracy.

Long-term operation outside the recommended conditions (5...50°C and 20...80% RH) can result in a temporary offset. After returning to the recommended range, this effect will disappear.

Indicators

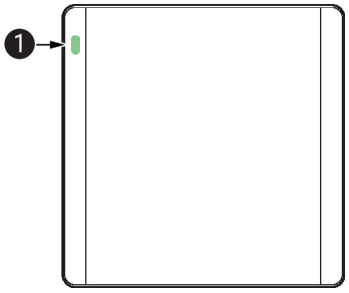

1 **CO_2 TLF (traffic light function), available on the (P-)22RTM-.. sensor**

Colours: green, yellow and red. LED can be configured and deactivated via Belimo Assistant 2.

Operation

Operation

With the Belimo Display App, actual values of the room unit can be displayed and setpoints can be adjusted. This means that no display on the room unit is required. Thanks to communication via NFC (near field communication), third parties cannot access safety critical data.

How it works:

1. Download the Belimo Display App
2. Hold the smartphone to the room unit
3. View/adjust actual values or setpoints
4. To activate the setpoints, hold the smartphone to the room unit again

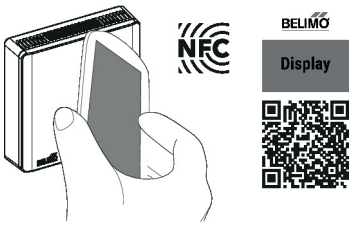

Parts included

Screws

Accessories

Tools

Description	Type
Service tool for wired and wireless setup, on-site operation and troubleshooting.	Belimo Assistant 2
Belimo Assistant Link Bluetooth and USB to NFC and MP-Bus converter for configurable and communicative devices	LINK.10

Service

NFC connection

Belimo devices marked with the NFC logo can be operated with Belimo Assistant 2.

Requirement:

- NFC- or Bluetooth-capable smartphone
- Belimo Assistant 2 (Google Play and Apple App Store)

Align NFC-capable smartphone on the device so that both NFC antennas are superposed.

Connect Bluetooth-enabled smartphone via the Bluetooth-to-NFC converter ZIP-BT-NFC to the device. Technical data and operating instructions are shown in the ZIP-BT-NFC data sheet.

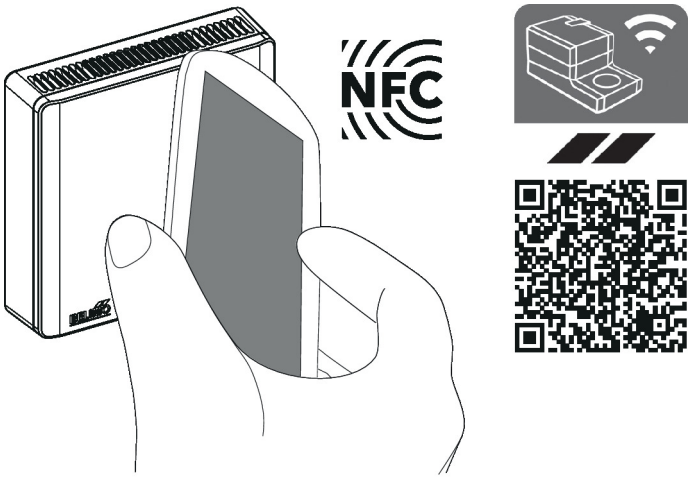

Wiring diagram

Analogue outputs: The analogue outputs AO1, AO2 and AO3 can be configured via NFC.
Factory settings:
AO1: Temperature
AO2: Humidity
AO3: CO_2

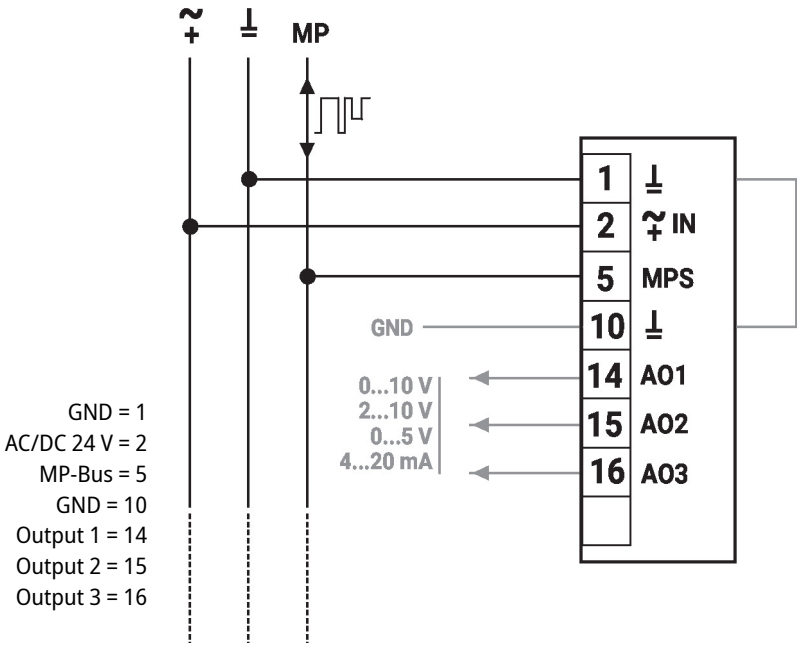

Dimensions

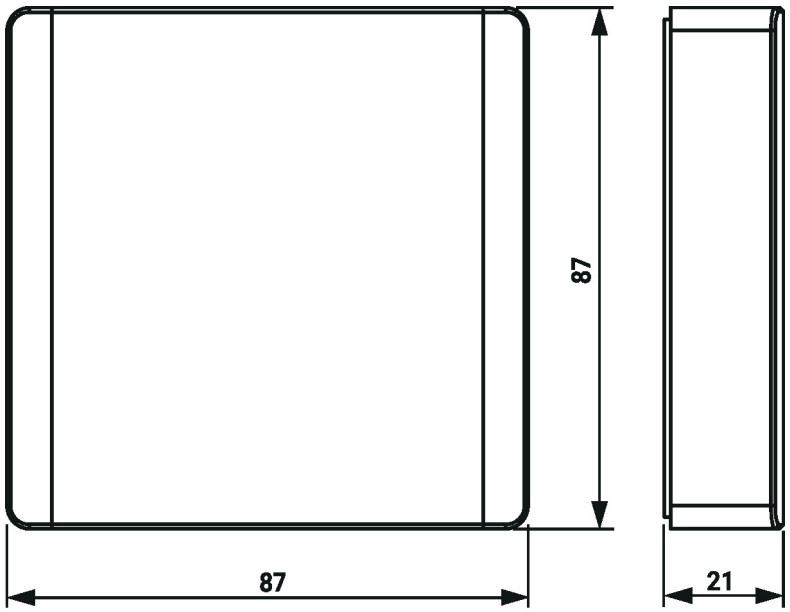

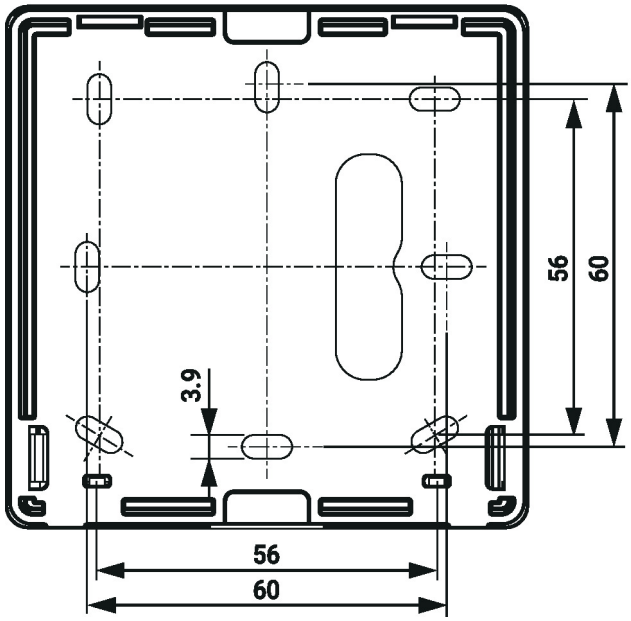

Type	Weight
22RTM-18-1	0.16 kg
22RTH-18-1	0.090 kg
22RT-18-1	0.090 kg

Further documentation

- Overview MP Cooperation Partners
- Description Data-Pool Values
- Installation instructions
- Quick Guide – Belimo Assistant 2