Outdoor sensor Temperature

Active sensor (4...20 mA) for measuring temperature in outdoor areas. Typical applications at cold stores, greenhouses, production plants and warehouses. IP65 / NEMA 4X rated housing.

5 YEAR WARRANTY

Type Overview

Type	Output signal active temperature	Additional features
22UT-14	4...20 mA	External sensor

Technical data

Electrical data	Nominal voltage	DC 24 V
	Nominal voltage range	DC 13.5...26.4 V
	Power consumption DC	0.5 W
	Electrical connection	Pluggable spring loaded terminal block max. 2.5 mm²
	Cable entry	Cable gland with strain relief ø6...8 mm
Functional data	Medium	Air
	Multirange	8 measuring ranges selectable
	Current output	1x 4...20 mA, max. resistance 500 Ω
Measuring data	Measured values	Temperature
Specification temperature active	Sensing element technology	Based on Pt1000 class AA
	Measuring range temperature settings	Active sensor: range selectable Attention: The maximum measuring range listed does not indicate the allowable fluid temperature for the sensor. Refer to safety data for the maximum fluid temperature limits. Setting / Range [°C] / Range [°F] / Factory setting S0 / -50...50 / -30...130 / ✓ S1 / -10...120 / 0...250 S2 / 0...50 / 40...140 S3 / 0...250 / 30...480 S4 / -15...35 / 0...100 S5 / 0...100 / 40...240 S6 / -20...80 / 40...90 S7 / 0...160 / 0...150
	Accuracy temperature	±0.5°C @ 21°C [±0.9°F @ 70°F] @ measuring range setting S2 and S4
	Long term stability	±0.04°C p.a. @ 21°C [±0.07°F p.a. @ 70°F]
	Time constant τ (63%) in the room	Typical 542 s
Safety data	Protection class IEC/EN	III, Protective Extra-Low Voltage (PELV)
	Power source UL	Class 2 Supply

Technical data

Safety data	Degree of protection IEC/EN	IP65
	Degree of protection NEMA/UL	NEMA 4X
	Housing	UL Enclosure Type 4X
	EU Conformity	CE Marking
	Certification IEC/EN	IEC/EN 60730-1
	Quality Standard	ISO 9001
	Type of action	Type 1
	Rated impulse voltage supply	0.8 kV
	Pollution degree	3
	Ambient humidity	Max. 95% RH, non-condensing
	Ambient temperature	-35...50°C [-30...120°F]
	Fluid temperature	-35...50°C [-30...122°F]
	Housing surface temperature	Max. 70°C [160°F]
Materials	Housing	Cover: PC, white Bottom: PC, white Seal: NBR70, black UV resistant
	Cable gland	PA6, white
	Mounting plate	PC, grey RAL 7001

Safety notes

This device has been designed for use in stationary heating, ventilation and air-conditioning systems and must not be used outside the specified field of application. Unauthorised modifications are prohibited. The product must not be used in relation with any equipment that in case of a failure may threaten humans, animals or assets.

Ensure all power is disconnected before installing. Do not connect to live/operating equipment.

Only authorised specialists may carry out installation. All applicable legal or institutional installation regulations must be complied with during installation.

The device contains electrical and electronic components and must not be disposed of as household refuse. All locally valid regulations and requirements must be observed.

Remarks

General remarks concerning sensors

When using lengthy connection wires (depending on the cross section used) the measuring result might be falsified due to a voltage drop at the common GND-wire (caused by the voltage current and the line resistance). In this case, 2 GND-wires must be wired to the sensor - one for supply voltage and one for the measuring current.

Sensing devices with a transducer should always be operated in the middle of the measuring range to avoid deviations at the measuring end points. The ambient temperature of transducer electronics should be kept constant. The transducers must be operated at a constant supply voltage (±0.2 V). When switching the supply voltage on/off, onsite power surges must be avoided.

Parts included

Description	Type
Mounting plate S housing	A-22D-A09
Dowels	
Screws	

Accessories

Optional accessories	Description	Type
	Connection adapter flex conduit, M20x1.5, for cable gland 1x 6 mm, Multipack 10 pcs.	A-22G-A01.1

Wiring diagram

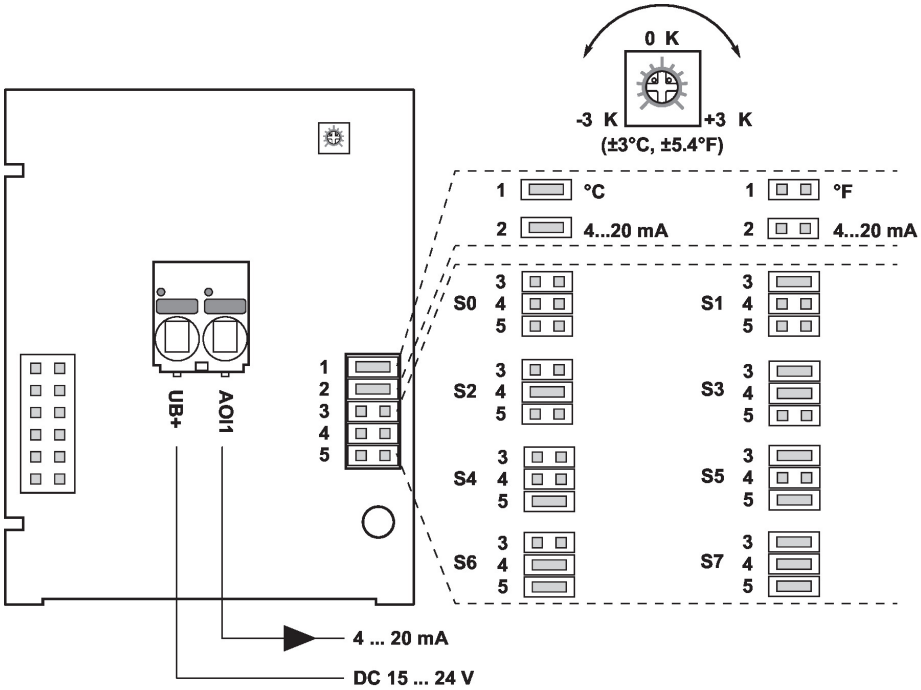

The following measuring ranges can be adjusted through the jumper settings:

Setting	Range [°C]	Range [°F]	Factory setting
S0	-50...50	-30...130	✔
S1	-10...120	0...250	
S2	0...50	40...140	
S3	0...250	30...480	
S4	-15...35	0...100	
S5	0...100	40...240	
S6	-20...80	40...90	
S7	0...160	0...150	

Dimensions

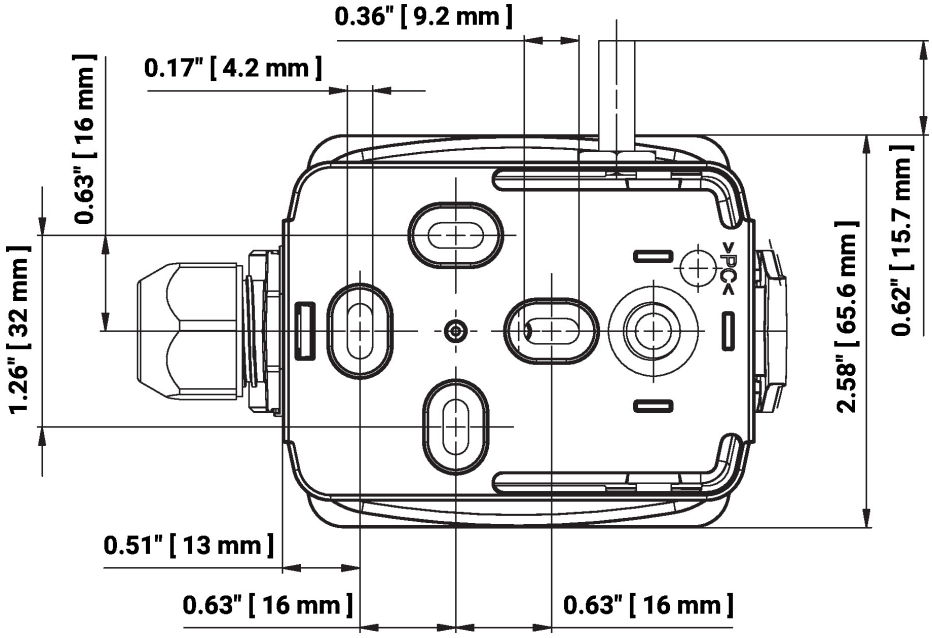

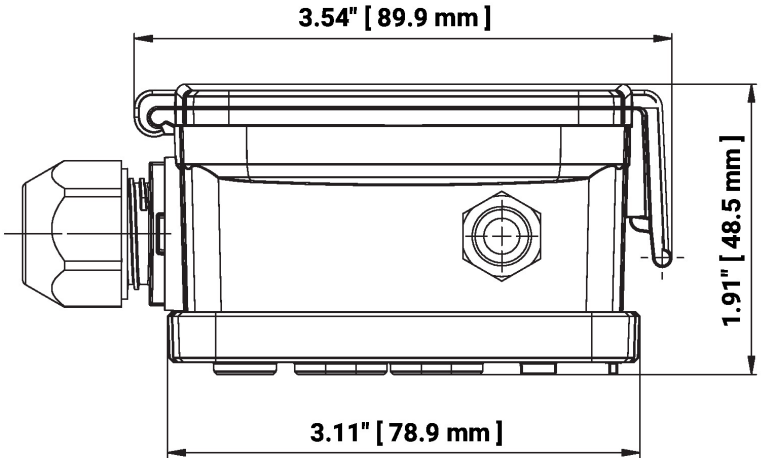

Type	Probe length	Weight
22UT-14	25 mm	0.13 kg

Further documentation

- Installation instructions