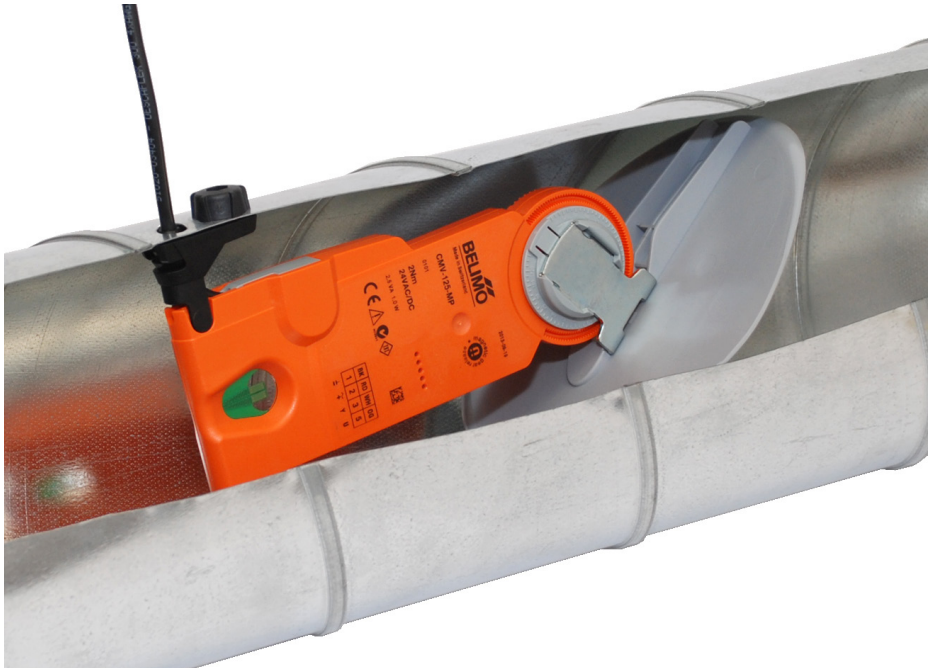

VAV solution
for controlled apartment ventilations

Table of contents

Technical data sheet **2**
Brief description 2
Type overview 2
Technical data 3
Connection 4
VAV – variable operation $\dot{V}_{min}$ … $\dot{V}_{max}$ 4
CAV – step mode CLOSED / $\dot{V}_{min}$ / $\dot{V}_{mid}$ / $\dot{V}_{max}$ / OPEN 6
MP-Bus operation – VAV / CAV function 6
Dimensioning of supply and connecting cable 7
Tool connection 7
Safety notes 8
Dimensions 8

Functions **9**
Volumetric flow measurement / setting 9
Reference signal Y 9
Actual value signal U_5 10
Control functions 11
Parallel connection 11
Additional functions 11

Applications **12**
Applications 12

Installation **13**
Installation 13
Pressure drop through the CMV-..-MP 14
Flow noise 15

Commissioning **17**
Commissioning 17

Upkeep and maintenance **18**
Upkeep and maintenance 18

VAV control unit complete with damper blade and air velocity sensor for pressure-independent VAV applications in controlled apartment ventilations. For installation in round ducts.

- **Air velocities: 0.3…7 m/s**
- **Control: DC 0/2…10 V / MP-Bus**
- **Feedback: Volume / Position DC 0/2…10 V**
- **Integration in bus systems**
  - **DDC controller with MP interface**
  - **Fan Optimiser systems**
  - **Gateway for LON / Modbus / KNX / ...**
  - **with integrated temperature sensor**
- **With additional connection option for active sensors and switches**
- **Connection of the Service and PC-Tool**

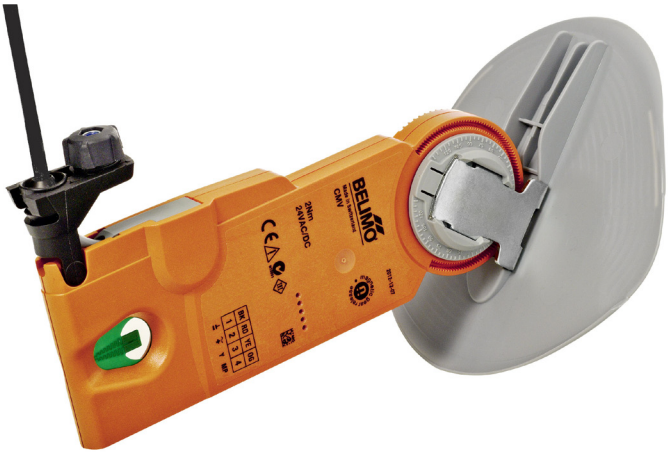

Brief description

Application
The CMV-..-MP is used for the pressure-independent control of air volume flows in controlled apartment ventilations.

Air volume measurement
The integrated thermoanemometric measurement system is for the recording of minimal air velocities. This enables the energy-optimised operation of the individual systems without any sacrifice of comfort.

Actuator
All installation sizes have the same actuator.

Control function
VAV or CAV mode in accordance with external setpoint specification.

Feedback
Current volumetric flow or damper position for Fan Optimiser systems.

VAV – variable volumetric flow
Variable volumetric flow with a modulating reference variable, e.g. room temperature controller, direct digital control or bus system, enables demand-related, energy-saving ventilation of individual rooms or zones. The input for the operating range $\dot{V}_{min}$ ... $\dot{V}_{max}$ can be adapted at the reference controller (mode switching).

CAV – constant volumetric flow
For constant volumetric flow applications, e.g. in step mode, controlled by means of a switch. The following operating modes can be selected from: CLOSED / $\dot{V}_{min}$ / $\dot{V}_{mid}$ / $\dot{V}_{max}$ / OPEN

Bus function
Up to eight Belimo MP devices (VAV / damper actuator / valve actuator) can be connected together over the MP-Bus and integrated into the following systems:
– LONWORKS® applications with Belimo UK24LON interface
– KNX applications with Belimo UK24EIB interface
– Modbus RTU applications with Belimo UK24MOD interface
– BACnet applications with Belimo UK24BAC interface
– DDC controller with integrated MP bus protocol
– Fan Optimiser applications with optimiser COU24-A-MP
An active sensor (0...10V, e.g. temperature), or a switch can optionally be integrated into the higher-level DDC or bus system via the MP-Bus.

Operating and service devices
BELIMO PC-Tool (PP or MP-Bus) or service tool ZTH (PP only) can be connected to the CMV-..-MP.

Assembly and connection
The CMV-..-MP, which is assembled by the OEM, is connected using the prefabricated connecting cable.

OEM factory settings
The CMV-..-MP is installed by the manufacturer of the apartment ventilation unit and the application is adjusted and tested accordingly. The CMV-..-MP is sold exclusively via the OEM channel for this reason.

Type overview

Type	DN * [mm]	Air-tightness in accordance with EN 1751	Weight [kg]	Fire load [MJ]
CMV-100-MP	100	Class 3	Approx. 0.250	5.4
CMV-125-MP	125	Class 2	Approx. 0.260	5.7
CMV-150-MP	150	Class 2	Approx. 0.285	6.5
CMV-160-MP	160	Class 2	Approx. 0.290	6.6

* Internal duct diameter

Technical data

Electrical data	Nominal voltage		AC 24 V, 50/60 Hz / DC 24 V
	Operating range		AC/DC 19.2 … 28.8 V
	Power consumption	Operation Rest position Dimensioning	1.5 W 1 W 2.5 VA
	Connection		Cable 1 m, 4 x 0.34 mm2
Integrated sensors	Type		Thermo-anemometer
	Air velocity		0.3 … 7 m/s
		Accuracy	± (0.1 m/s + 10% of the required air volume)
	Temperature sensor		for the measurement of the air temperature in the duct (read out via MP-Bus)
		Accuracy	± 0.3 K (at 25 °C and sufficient inflow)
Actuator	Torque		Min. 2 Nm @ nominal voltage
	Synchronisation		After every electricity interruption
	Manual adjustment		Gear disengagement with magnet
	Sound power level, actuator		max. 35 dB(A)
	Angle of rotation		70° ∢ (electronically limited)
	Running time		1 °/sec
Damper	Static differential pressure through the damper		max. 1000 Pa
Adjustment values	$\dot{V}_{nom}$		OEM-specific setting (3 / 5 / 7 m/s)
	$\dot{V}_{max}$		20 … 100% of $\dot{V}_{nom}$
	$\dot{V}_{min}$		0 … 100% of $\dot{V}_{nom}$
	$\dot{V}_{mid}$		between $\dot{V}_{min}$ … $\dot{V}_{max}$
	Site Adjustment factor		Setting range: 0.7 … 1,3 (for details, see page 14)
	Altitude compensation		Range: 0 … 3000 m above sea level (for details, see page 17)
Analogue control	VAV mode for reference value input Y		– DC 2 … 10 V / (4 … 20 mA with 500 Ω) – DC 0 … 10 V / (0 … 20 mA with 500 Ω) Input impedance min. 100 kOhm
	Actual value signal U5		– DC 0/2 … 10 V (max. 1 mA) Depending on the mode Adjustable: Volumetric flow / damper position
	CAV operating modes: (constant volumetric flow)		CLOSED / $\dot{V}_{min}$ / $\dot{V}_{mid}$* / $\dot{V}_{max}$ / OPEN* (*only with AC 24 V supply)
MP-Bus functions	Addressing in bus mode		MP1 … 8 (16) (analogue operation: PP)
	DDC controller		DDC controllers / programmable controller with an integrated MP-Bus interface For manufacturers, see www.belimo.eu
	Fan Optimiser (fan control)		with BELIMO Fan Optimiser COU24-A-MP or DDC controller
	Sensor integration		– active sensors (0 … 10 V) – 2-point signal (switching capacity 0.5 mA @ 24V)
Safety	Protection class		III Safety extra-low voltage
	Degree of protection		IP00
	EMC		CE according to 2004/108/EU
	Certification		– Certified to IEC/EN 60730-1 and IEC/EN 60730-2-14 – UL approval applied for

Technical data (continued)

Safety

Flame class	Damper blade Actuator	UL 94 HB UL 94 V-0
Fire behavior group	Damper blade Actuator	RF3 (CH) RF2 (CH)
Mode of operation		Type 1
Rated impulse voltage		0.8 kV
Environmental contamination		2
Ambient temperature		0 … 50 °C
Non-operating temperature		–40 ... 80 °C
Ambient humidity		max. 95 % r.h., non-condensing
Maintenance		Maintenance-free (see page 18 for details)

Connection

Cable connection

The connection is made using the connecting cable mounted to the CMV-..-MP.

Notes
- Supply via safety isolating transformer!
- Connections 1 and 2 (AC/DC 24V) and 5 (MP signal) must be routed to accessible terminals (room temperature controller, floor distributor, control cabinet, etc.) in order to enable access with the tools for diagnostic and service work.

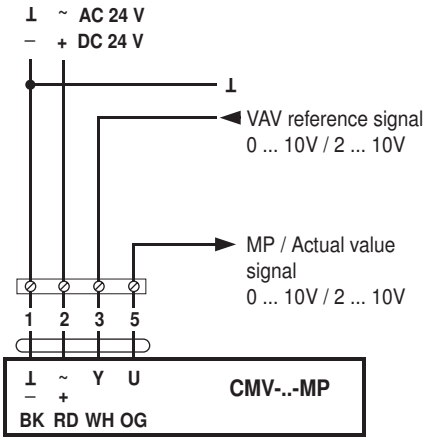

Wire colours:
1 = black (BK)
2 = red (RD)
3 = white (WH)
5 = orange (OG)

VAV – Variable operation $\dot{V}_{min}$ … $\dot{V}_{max}$

Wiring diagram

Example 1:
VAV with analogue reference signal

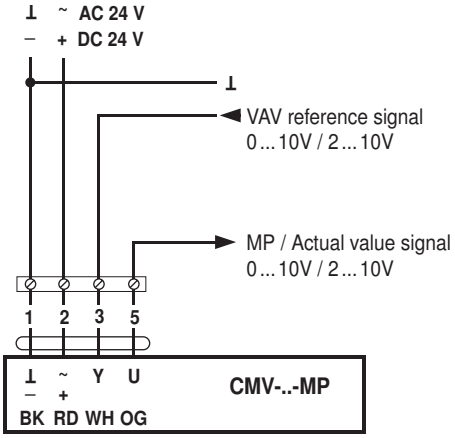

Example 2:
VAV with shut-off (CLOSED), 2 ... 10V mode

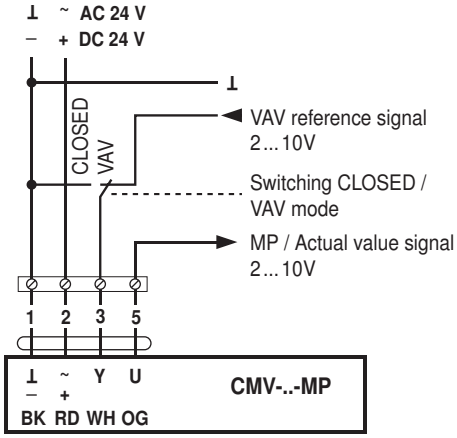

VAV – Variable operation $\dot{V}_{min}$ ... $\dot{V}_{max}$ (continued)

Example 3:
VAV with analogue reference signal SUP / ETA, parallel control

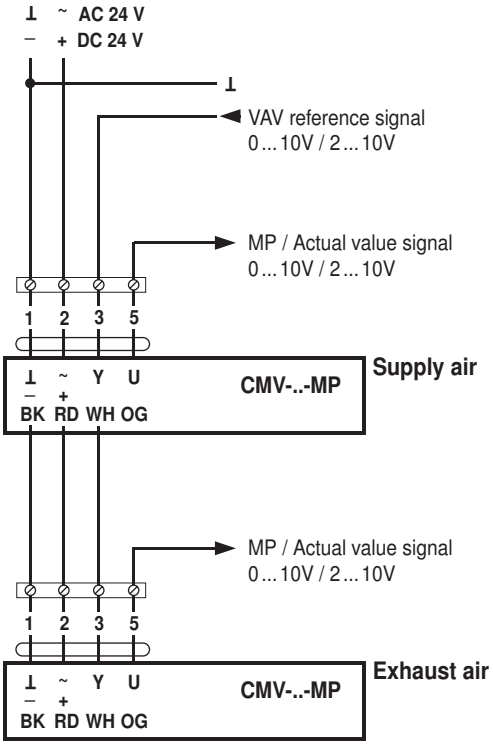

CAV – Step mode CLOSED / $\dot{V}_{min}$ / $\dot{V}_{mid}$ / $\dot{V}_{max}$ / OPEN

Wiring diagram

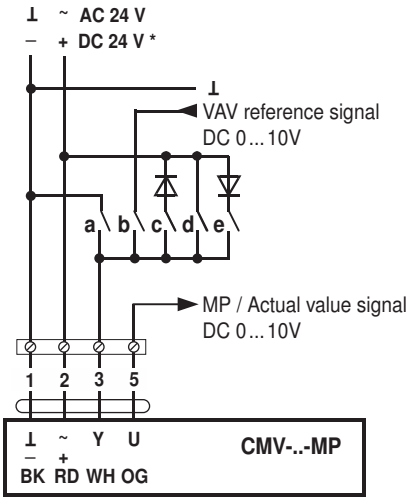

Note
– Restrictions with DC 24 V power supply
– Note that the contacts are mutually interlocking!

Wire colours:
1 = black (BK)
2 = red (RD)
3 = white (WH)
5 = orange (OG)

CAV function

Mode setting	–	0 ... 10 V	0 ... 10 V	0 ... 10 V	0 ... 10 V
	2 ... 10 V	2 ... 10 V	2 ... 10 V	2 ... 10 V	2 ... 10 V
Signal	⊥ –	0 ... 10 V 2 ... 10 V	~	~ +	~
Function	3	3	3	3	3
Damper CLOSED	a) CLOSED				
$\dot{V}_{min}$ ... $\dot{V}_{max}$		b) VAV			
CAV – $\dot{V}_{min}$	All open – $\dot{V}_{min}$ active				
Damper OPEN					e) OPEN *
CAV – $\dot{V}_{max}$				d) $\dot{V}_{max}$	
CAV – $\dot{V}_{mid}$			c) $\dot{V}_{mid}$		

Legend
- Contact closed, function active
- Contact closed, function active, only in 2 ... 10 V mode
- Contact open

* $\dot{V}_{mid}$ and OPEN not available with DC 24 V supply

Example 2:
CAV application $\dot{V}_{min}$ - $\dot{V}_{mid}$ - $\dot{V}_{max}$
(Mode 0 ... 10 V / 2 ... 10 V)

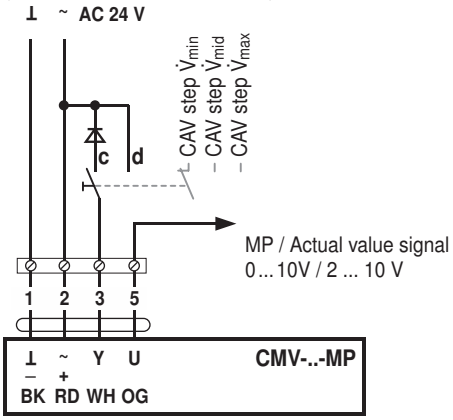

Note
- Supply through safety transformer
  Connections 1 and 2 (AC/DC 24V) and 5 (MP signal) must be routed to accessible terminals (room temperature controller, floor distributor, control cabinet, etc.) in order to enable access with the tools for diagnostic and service work.

MP-Bus operation – VAV / CAV function

Wiring diagram

Control via MP-Bus

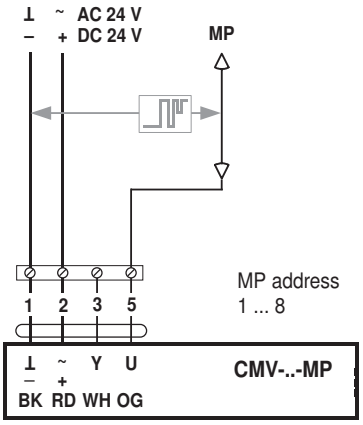

MP-Bus connection with integrated sensor

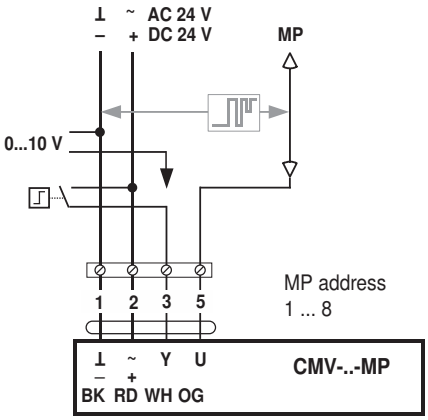

Connection of active sensors (0...10 V e.g.humidity) or switch (e.g. window contact)

Note
This is a connection description.
Depending on the application, the terminal assignments may vary. The connection and the commissioning must be carried out by trained personnel.

Dimensioning of supply and connecting cable

General

In addition to the actual wire sizing, attention must also be paid to the surrounding area and the cable routing. If at all possible, signal cables must not be laid in the vicinity of load cables, objects liable to cause EMC interference, etc. Paired or layer stranded cables enhance interference resistance.

24 V supply, dimensioning and cabling

The wire sizing and installation of the AC 24V supply, the fuse protection, and the cables are dependent on the total operated load and local regulations.
Account must be taken of the following performance data, including the starting currents of the actuators:

- Dimensioning values of the CMV-..-MP, see Technical data
- Dimensioning values of further controlling elements, etc. can be found in the current data sheets and product information.
- Additional intended devices which are connected to the same 24V supply
- Reserve capacity for subsequent expansion (if planned).

MP-Bus integration – supply, dimensioning and cabling

Detailed information on bus integration under www.belimo.eu

Tool connection

Settings and diagnostics

The settings and diagnostics of the connected CMV-..-MP can – thanks to MP-Bus technology – be connected easily and rapidly with the Belimo PC-Tool or with the ZTH service tool.

MP connection (5)

The CMV-..-MP can communicate with the Service tools via the MP connection (connection wire 5, orange).

Belimo VAV operating and service device:
- Belimo PC-Tool, with level converter ZIP-USB-MP
- Service tool ZTH

PC-Tool

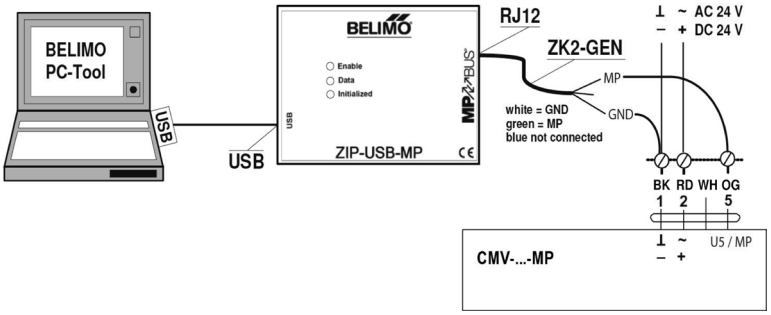

ZTH

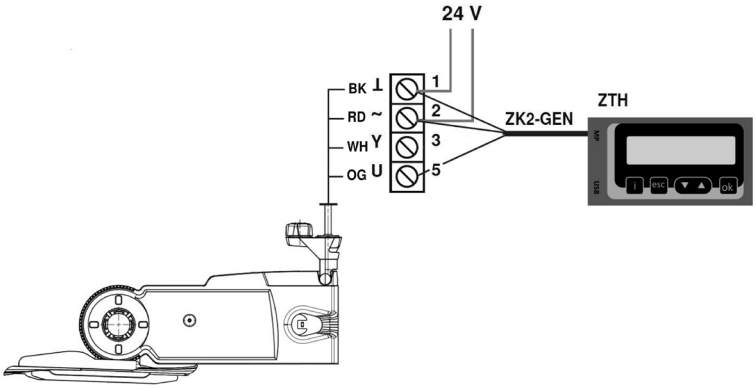

Safety notes

- The device is not allowed to be used outside the specified field of application, especially in aircraft or in any other airborne means of transport.
- It may be installed only by suitably trained personnel.
- Any legal regulations or regulations issued by authorities must be observed during assembly.
- The device may only be opened at the manufacturer's site. It does not contain any parts that can be replaced or repaired by the user.
- The cable must not be removed from the device.
- The device contains electrical and electronic components and is not allowed to be disposed of as household refuse. All locally valid regulations and requirements must be observed.

Dimensions

Dimensional drawings CMV-..-MP

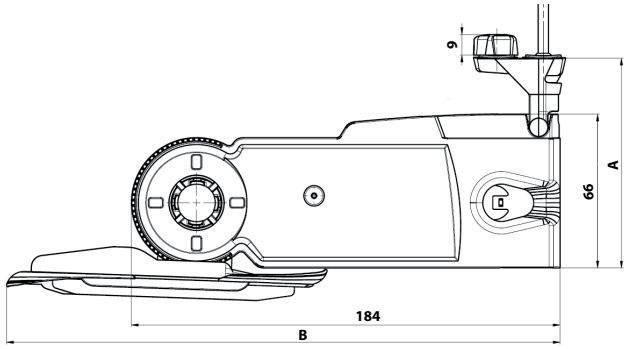

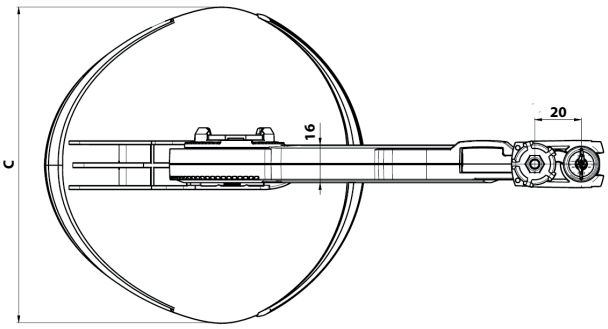

Type	A	B	C
	[mm]	[mm]	[mm]
CMV-100-MP	78	224	108
CMV-125-MP	90	238	135
CMV-150-MP	105	251	162
CMV-160-MP	105	256	175

Volumetric flow measurement / setting

Volumetric flow measurement

1 VAV control unit with integrated damper actuator
2 Flow-optimised damper blade
3 Air velocity and temperature sensor
4 Mounting device

Air velocity sensor, VAV controller, actuator and damper blade form a closed system for pressure-independent control of the volumetric flow of the air.

The built-in sensor measures the air velocity in accordance with the thermoanemometric principle. This measurement principle is particularly suitable for the exact determination of small flow velocities. The current volumetric flow is calculated with this value and the duct diameter.

The current deviation (difference between setpoint and actual value) constitutes the positioning signal for the integrated actuator. This continues to move the damper blade until the required air volume is reached.

For the control itself, one can choose between the traditional analogue control signal or MP-Bus, depending on the application.

Nominal volumetric flow $\dot{V}_{nom}$

System-specific energy and acoustic considerations necessitate that the specific volumetric flow for each duct diameter may not exceed a certain value. This binding nominal volumetric flow is defined by the unit manufacturer and is set accordingly.

The selected maximum air velocity and the damper blade diameter then reveal the nominal volumetric flow $\dot{V}_{nom}$.

Type	@ 3 m/s	@ 5 m/s	@ 7 m/s
	[m³/h]	[m³/h]	[m³/h]
CMV-100-MP	85	141	198
CMV-125-MP	133	221	309
CMV-150-MP	191	318	445
CMV-160-MP	217	362	507

Operating volumetric flow setting $\dot{V}_{min}$ / $\dot{V}_{mid}$ / $\dot{V}_{max}$

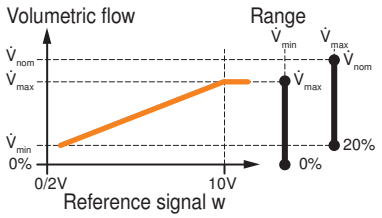

The linear characteristic curve of the volumetric flow controller makes simple adjustment of the operating volumetric flows at the system possible.
Adjustment work which would normally be performed by the unit manufacturer or at the time of commissioning. $\dot{V}_{max}$ marks the upper limit value and $\dot{V}_{min}$ the lower one with reference to the nominal volumetric flow.
The intermediate position $\dot{V}_{mid}$ is available for constant volume applications (CAV) if required. (range selectable between $\dot{V}_{min}$ and $\dot{V}_{max.}$).
$\dot{V}_{min}$ / $\dot{V}_{mid}$ / $\dot{V}_{max}$ can be adjusted in terms of percentage to the necessary V_{nom}.

Limitation: $\dot{V}_{mid}$ is available only for AC 24 V supply.

Reference signal Y

Behaviour in the lower control range

The following descriptions explain the behaviour of the CMV-..-MP in the lower control range. The different behaviours arise from the setting of the reference signal (0 ... 10 V / 2 ... 10 V) and from the set value for $\dot{V}_{min}$ (connection 3 (WH)).

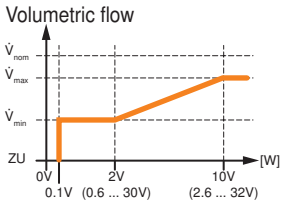

Reference signal 2…10 V and $\dot{V}_{min}$ > 0 %
If the reference signal falls below 2.0 V, the volumetric flow unit regulates to $\dot{V}_{min}$. The shut-off level (damper CLOSED) is set at 0.1 V.

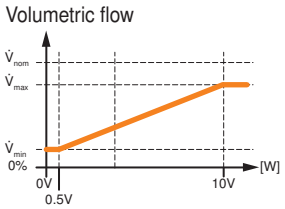

Reference signal 0…10 V and $\dot{V}_{min}$ > 0 %
As soon as the reference signal falls below 0.5 V, the volumetric flow unit regulates to $\dot{V}_{min}$.

Reference signal Y (continued)

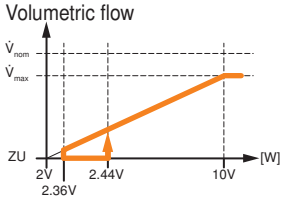

Reference signal 2…10 V and $\dot{V}_{min}$ = 0 %
The damper closes as soon as the reference signal drops below 2.36 V. The controller will return to control mode when the signal rises again above 2.44 V.

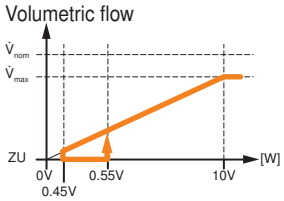

Reference signal 0…10 V and $\dot{V}_{min}$ = 0 %
The damper closes as soon as the reference signal drops below 0.45 V. The controller will return to control mode when the signal rises again above 0.55 V.

Actual value signal U_5

Notes
The actual value signal U5 can not be chosen independent from reference signal Y.
-> the same mode for both signals

Two measured variables
The CMV-..-MP provides two measured variables to choose from as actual value signal:
- Volumetric flow (default setting)
- Damper position

The setting can be switched with the PC-Tool (version V3.9 or higher).

Example
with mode
0 ... 10V

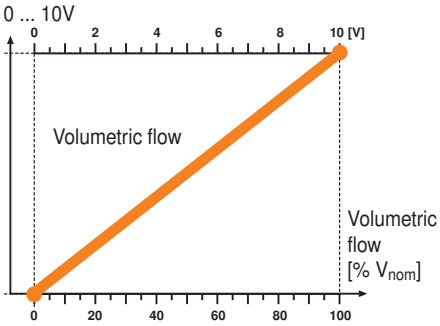

Actual value signal U_5 – volumetric flow
The volumetric flow actual value signal U_5 shows the current volumetric flow, calculated on the basis of the current air velocity in the VAV unit.
This value corresponds to 0 … 100% of the set nominal volumetric flow. The $\dot{V}_{nom}$ is set at the factory by the unit manufacturer and should be visible on the type plate of the VAV unit.

The U_5 volumetric flow actual value signal
- Corresponds to 0 … 100% $\dot{V}_{nom}$
- Displays the actual volumetric flow
- Is not influenced by the $\dot{V}_{min}$ and $\dot{V}_{max}$ settings
- U_5 signals may not be interconnected electrically in analogue operation.

Example
with mode
0 ... 10V

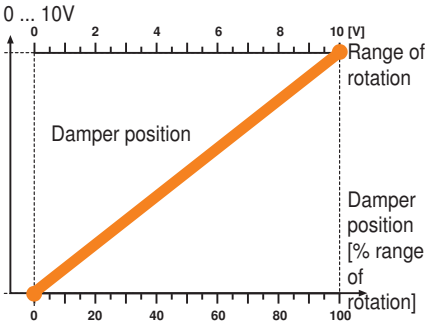

Actual value signal U_5 – damper position
The damper position actual value signal shows the current damper position. The value is displayed as 0 … 100% of the available damper setting range.

The actual value signal U_5 – damper position:
- Corresponds to 0 … 100% of the range of rotation of the damper
- Shows the current damper position
- U_5 signals may not be interconnected electrically in analogue operation.

Control functions

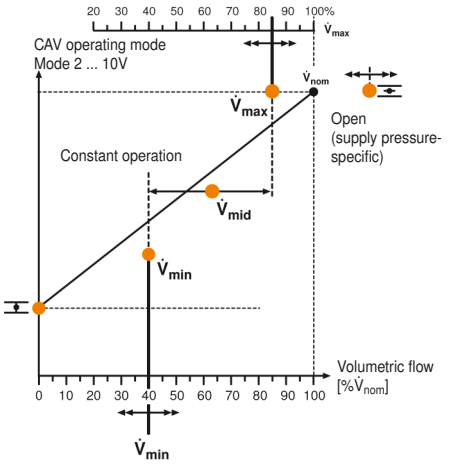

CAV/VAV mode
This control function corresponds to the conventional CAV/VAV function.
- CAV: constant volumetric flow regulation in the step mode CLOSED / $\dot{V}_{min}$ / $\dot{V}_{mid}$ / $\dot{V}_{max}$ / OPEN
  For step control acting on input terminal 3, see page 5

With constant volumetric flow applications, the CMV-..-MP regulates to the required, constant volumetric flow. One or several operating modes can be prescribed thereby according to requirements.

The following operating modes are available:
CLOSED / $\dot{V}_{min}$ / $\dot{V}_{mid}$ / $\dot{V}_{max}$ / OPEN
- Shut-off operation – Damper CLOSED: The damper is moved into the CLOSED position in a defined manner (0%).
- Operating modes $\dot{V}_{max}$ / $\dot{V}_{mid}$ / $\dot{V}_{min}$:
  The CMV-..-MP permanently regulates the set volumetric flow.
- Flushing operation – damper OPEN: The damper can be opened 100% for maximum ventilation, in which case volumetric flow control is deactivated.

Application, e.g. in combination with:
- CRA24-B1P 3-step switch
- external 3-step switch with diode switching
- Contact circuits

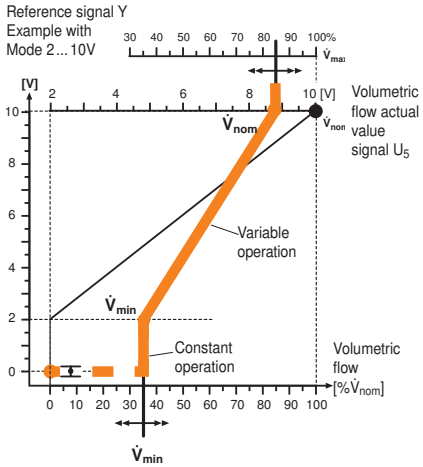

VAV variable volumetric flow controller $\dot{V}_{min}$ … $\dot{V}_{max}$
The reference signal Y allows the volumetric flow to be controlled linearly within the bandwidth of the set operating volumetric flows. This allows ventilation to be controlled according to demand continuously from the minimum setting (hygiene ventilation) up to the maximum value as a function of the room temperature.
The output signal of a master controller or a setpoint generator is supplied to the reference value input of the CMV-..-MP for this purpose (see page 5).

Variable volumetric flow operation (VAV)
The required volumetric flow is specified linearly in the Vmin … Vmax range by means of an analogue reference signal or via the MP-Bus.

Application, e.g. in combination with:
- CRA24-B3 (P) Room controller
- CRP24-B1 setpoint adjuster

Parallel connection

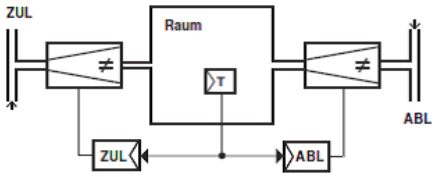

Principle:
The reference signal of the temperature controller is connected parallel to the reference value input of the supply air and the exhaust air controller. The operating volumetric flows $\dot{V}_{min}$ and $\dot{V}_{max}$ are set on both controllers.
Wiring diagram, see page 5

Room pressure ratio
With the parallel connection, both VAV units are operated independently of one another with a shared reference signal. The operating volumetric flows of the supply and exhaust unit are to be set in accordance with the desired room pressure ratio.

Supply and exhaust air controllers operated in an open ratio, i.e. if a malfunction occurs in one of the two air systems (supply or exhaust air), then the room pressure ratio will be impaired as a result of the system. The tolerances of the units could add together in the worst-case scenario. This circumstance must be taken into account be the planning engeneer.

Operating volumetric flow settings
The $\dot{V}_{max}$ and $\dot{V}_{min}$ values used for the required volumetric flow must be set on each VAV controller.

CAV application
In constant volumetric flow applications, the operating mode control (CLOSED / $\dot{V}_{min}$ / $\dot{V}_{mid}$ / $\dot{V}_{max}$ / OPEN) is set on both VAV controllers.

Setting for balanced room pressure ratio
As a result of the proportional allocations of the reference signal to the range of the values for $\dot{V}_{max}$ and $\dot{V}_{min}$, the parallel running of VAV units with different nominal diameters and differentiated setting ranges is ensured.

Additional functions

Measuring the duct temperature
The CMV-..-MP is equipped with a temperature sensor that measures the current air temperature in the duct. This value can be read out via the MP-Bus and used for display or evaluation purposes. Wiring diagram, see page 6.

Applications

Detailed descriptions of the applications shown are comprehensively described in the documentation for the applications of the controller for apartments CRA24-B3(P).

For more information, see www.belimo.com

Apartment ventilation with CRA24-B3(P)

The connected CMV-..-MP for regulated residential area ventilation are guided by the CRA24-B3 room temperature controller with differential volumes in accordance with the room temperature. The controller is actuated in this application by means of the "Temperature" strategy. A 3-point signal (optional thermal actuator) acts as the control for the heating valve actuator. The override functions are activated by external contacts. The room protection function is implemented for tR <14°C by means of the internal or external temperature sensor. Maximum room temperature monitoring can be activated as an option. If the room temperature exceeds 28°C, then ventilation will be enabled at maximum volume during energy block EHO, in order to move the warm air out of the room as rapidly as possible.

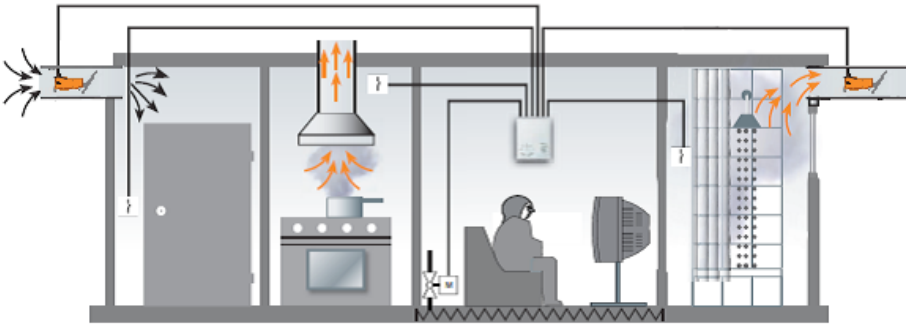

Apartment ventilation with CRA24-B3(P) and Fan Optimiser COU24-A-MP

The system is operated by the Fan Optimiser – on the basis of the current demand signals – with optimum damper positions. The aim is to keep pressure loss from the VAV units as low as possible and thereby reduce operating costs in the long term by lowering the fan output and the noise levels of the flow.
The damper position of the individual VAV units is transmitted to the Fan Optimiser via the MP-Bus. These values make up the control variables for regulating the frequency converter-controlled fan or EC fans. Thanks to this Belimo MP-Bus-based technology, considerable energy savings can be achieved for the fans.

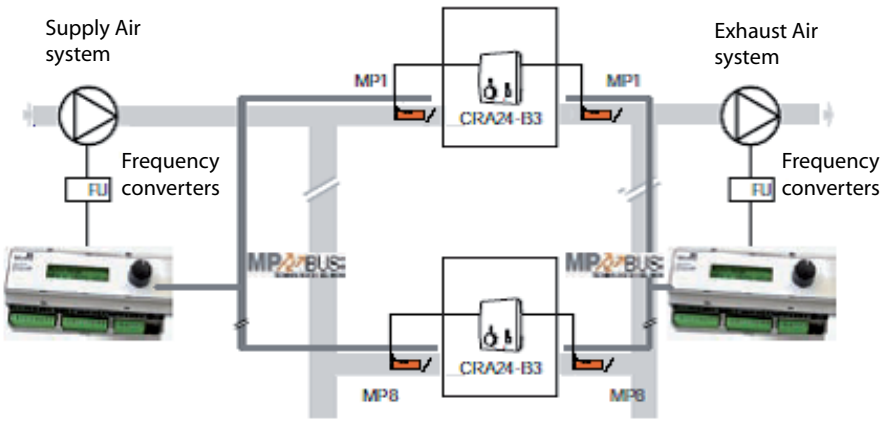

Installation

Pipelines

BELIMO recommends the use of round folded spiral-seam pipes (spiro pipes) with 0.5 mm metal gauge in accordance with DIN EN 1506 (previously DIN 24145) with the fold on the outside of the pipe.
Folded spiral-seam pipes are usually rounder than longitudinally-welded pipes. Leakages can be reduced as a result. The interior side of the folded spiral-seam pipes is smooth. The welding seam can inhibit the function of the damper blade with longitudinally welded pipes.

Material: only galvanised sheet steel or chrome steel. Installation in plastic pipelines is not recommended.

Please observe the following recommendations, if longitudinally welded pipes nevertheless need to be used. BELIMO cannot guarantee the proper functioning of the CMV-..-MP.

Do not place the fastening holes of the CMV-..-MP across from the welding seam. The damper blade could become damaged after a short time.

The fastening holes should be drilled approximately 40 mm away from the welding seam. This will reduce the damper noise and damage to the damper blade to a minimum.

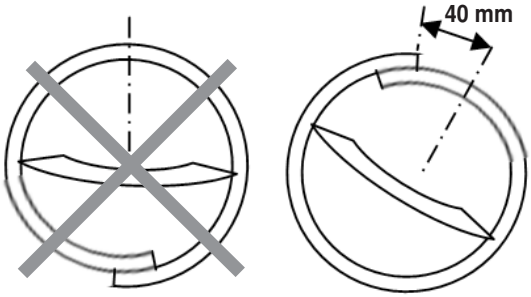

Mounting situation

The duct length is dependent on both the unit and the installation situation. For the pipe connection, take into account the bushing size (insertion depth) before the actuator fixing and after the damper blade.

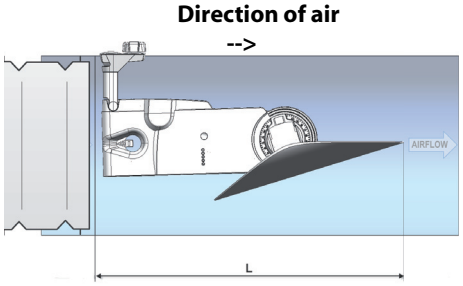

DN	L
100	≥ 230 mm
125	≥ 245 mm
150	≥ 260 mm
160	≥ 270 mm

Drilling template

Belimo requires the following alignment of the bore holes:

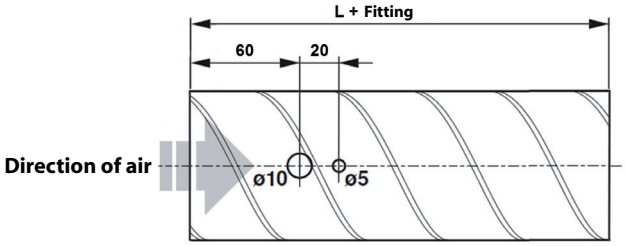

Installation in the pipe

For the correct installation of the CMV-..-MP in a pipe, follow the instructions contained in the manual
(Art. 70949-00001).
Correct functioning of the CMV-..-MP in contingent on a right-angled cable exit from the pipe.

Direction of air

Observe correct direction of air flow: → Actuator → Damper blade →
The sensor must be exposed to the air flow. Special installation shapes require verification.

Installation (continued)

Inflow paths

For a reliable determination of the volumetric flow, the measurement system of the CMV-..-MP requires the following inflow paths.

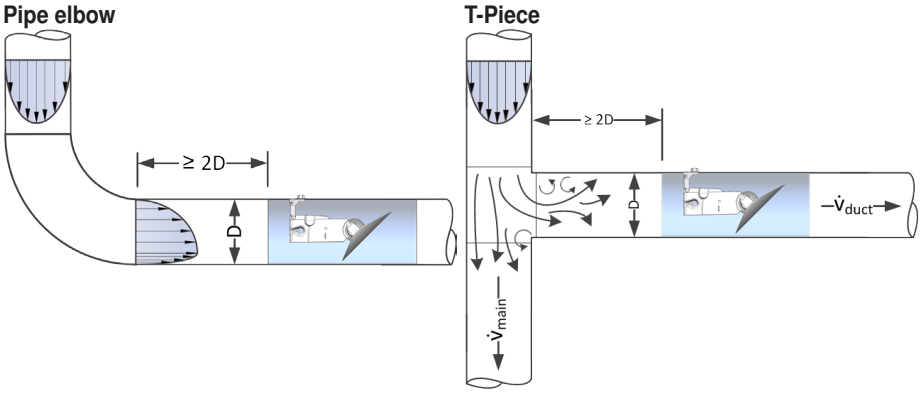

No special flow-calming sections are required downstream from the device.

Site adjustment factor

Unfavourable installation positions can lead to measurement deviations caused by non-optimal inflow into the air velocity sensor.
These deviations can be compensated for with the setting of the side adjustment factor.
Procedure:
1. Start up the ventilator and set the required volumetric flow
2. Ensuring that the volumetric flow is constant
3. Measurement of the current volumetric flow with a correspondingly precise reference measurement device
4. Calculation of the required correction factor in accordance with the following formula

$$\text{site adjustment factor} = \frac{\dot{V}_{\text{act.value reference measurment device}}}{\dot{V}_{\text{act.value CMV-..-MP}}}$$

5. Input and confirmation of the calculated correction factor with the ZTH or the PC-Tool.

Setting range: 0.7 … 1.3

Pressure drop through the CMV-..-MP

Minimal pressure drop

The minimum pressure drop through the completely opened damper of the CMV-..-MP is described in the following diagram

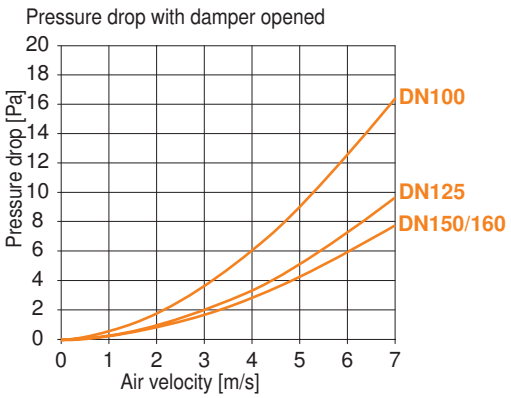

Flow noise

The flow noises are specified at various differential pressures.

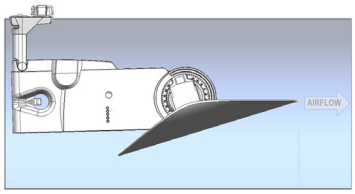

Definitions

L_W	[dB/Oct]	Sound power level of the respective octave wavelengths caused by the flow noises
L_{WA}	[dB(A)]	Total sound power level (A-evaluated) caused by the flow noises
Δp	[Pa]	static differential pressure above the volumetric flow controller
Δp_{min}	[Pa]	minimal static differential pressure above the volumetric flow controller during control mode

Nominal dimension [mm]	Volumetric flow [l/s]	Volumetric flow [m3/h]	Flow velocity [m/s]	Δpmin [Pa]	Static differential pressure Δp [Pa] 50 Sound power L_W [dB/Oct] Octave-mid-frequency range f_m [Hz] 63	125	250	500	1000	2000	4000	8000	L_{WA} [dB(A)]	100 Sound power L_W [dB/Oct] Octave-mid-frequency range f_m [Hz] 63	125	250	500	1000	2000	4000	8000	L_{WA} [dB(A)]
	7.9	28	1	<5	53	41	39	37	33	24	<20	<20	**38**	56	43	42	42	40	33	24	<20	**44**
	16	57	2	<5	55	48	45	40	36	26	<20	<20	**42**	59	51	50	46	43	36	27	<20	**48**
100	24	85	3	5	58	52	49	44	38	29	<20	<20	**46**	62	56	53	50	44	38	29	20	**51**
	39	141	5	15	63	58	54	49	43	36	27	<20	**51**	66	62	59	55	49	43	36	27	**56**
	55	198	7	29	66	61	55	51	46	40	32	25	**53**	68	66	61	56	51	46	39	33	**58**
	12.3	44	1	<5	51	39	36	32	29	23	<20	<20	**35**	53	42	40	39	38	33	25	<20	**42**
	25	88	2	<5	54	46	42	37	31	22	<20	<20	**39**	57	49	46	43	39	34	25	<20	**45**
125	37	133	3	<5	59	50	46	41	35	28	<20	<20	**43**	62	54	51	47	41	35	27	<20	**48**
	61	221	5	11	66	56	52	48	41	34	23	<20	**49**	68	60	57	53	47	41	32	23	**54**
	86	309	7	21	71	59	55	51	45	38	31	24	**53**	73	63	60	56	50	44	38	31	**58**
	17.7	64	1	<5	52	40	40	34	29	<20	<20	<20	**36**	56	44	44	40	37	32	22	<20	**42**
	35	127	2	<5	57	47	44	38	31	23	<20	<20	**40**	60	51	50	45	40	34	25	<20	**47**
150	53	191	3	<5	61	50	48	42	35	27	<20	<20	**44**	65	54	53	49	43	37	28	20	**50**
	88	318	5	9	66	55	53	49	42	34	25	<20	**50**	70	59	58	54	48	42	34	23	**55**
	124	445	7	18	68	58	56	51	46	40	29	23	**53**	72	64	62	57	51	46	37	31	**59**
	20	72	1	<5	54	41	37	34	29	21	<20	<20	**36**	56	43	42	40	36	30	23	<20	**41**
	40	145	2	<5	58	47	44	39	33	25	<20	<20	**41**	60	51	50	47	42	36	27	<20	**48**
160	60	217	3	<5	62	51	49	44	36	28	<20	<20	**45**	64	56	54	50	44	38	29	21	**51**
	101	362	5	8	70	57	53	48	43	37	25	<20	**51**	71	61	58	54	48	44	34	25	**56**
	141	507	7	15	74	60	55	52	46	41	32	<20	**54**	75	64	60	56	51	46	38	29	**58**

Nominal dimension [mm]	Volumetric flow [l/s]	Volumetric flow [m3/h]	Flow velocity [m/s]	Δpmin [Pa]	Static differential pressure Δp [Pa] 200 Sound power LW [dB/Oct] Octave-mid-frequency range fm [Hz] 63	125	250	500	1000	2000	4000	8000	L_{WA} [dB(A)]	300 Sound power L_W [dB/Oct] Octave-mid-frequency range f_m [Hz] 63	125	250	500	1000	2000	4000	8000	L_{WA} [dB(A)]
	7.9	28	1	<5	59	45	46	47	47	43	36	30	**51**	61	46	48	50	51	49	43	38	**55**
	16	57	2	<5	63	54	54	52	50	47	40	32	**55**	65	56	57	55	54	53	47	41	**59**
100	24	85	3	5	66	59	58	55	51	47	40	34	**57**	68	61	61	59	55	52	47	41	**61**
	39	141	5	15	69	67	65	61	55	50	44	38	**62**	71	69	68	64	59	54	50	44	**65**
	55	198	7	29	71	71	67	62	57	52	47	42	**64**	72	73	70	65	61	56	51	46	**67**
	12.3	44	1	<5	56	44	44	46	46	43	36	27	**50**	57	46	46	50	52	49	43	34	**55**
	25	88	2	<5	60	52	51	48	47	45	38	29	**52**	61	54	53	52	52	52	45	36	**57**
125	37	133	3	<5	65	57	55	52	48	43	38	30	**54**	66	59	57	55	51	47	45	38	**57**
	61	221	5	11	70	63	61	58	53	47	42	33	**59**	71	66	64	60	56	51	47	39	**62**
	86	309	7	21	74	67	65	61	56	50	45	38	**63**	75	70	68	64	59	54	49	42	**66**
	17.7	64	1	<5	59	47	49	47	45	43	37	29	**50**	61	50	51	51	49	50	46	37	**55**
	35	127	2	<5	64	56	56	52	49	46	37	29	**55**	66	58	59	57	55	52	44	37	**60**
150	53	191	3	<5	68	58	58	55	51	46	39	32	**57**	70	61	61	59	55	52	45	39	**61**
	88	318	5	9	73	63	63	59	54	49	43	33	**61**	75	66	65	62	58	54	48	40	**64**
	124	445	7	18	75	69	68	62	57	52	45	38	**64**	77	72	71	65	60	55	50	43	**67**
	20	72	1	<5	57	46	47	47	43	39	32	26	**48**	58	48	50	51	46	44	37	32	**52**
	40	145	2	<5	62	55	56	55	51	47	39	32	**56**	63	58	60	60	56	54	46	40	**62**
160	60	217	3	<5	67	60	60	57	53	48	40	33	**58**	68	62	63	60	58	53	46	40	**62**
	101	362	5	8	72	65	63	59	54	50	43	36	**60**	73	68	66	61	57	53	48	43	**64**
	141	507	7	15	75	68	65	60	56	52	45	39	**63**	75	70	68	63	58	55	49	45	**65**

Commissioning

Ideally, the service tool ZTH is used for the commissioning and the functional check. This means that all relevant parameters can be set and the units are tested for correct functioning. The use of the PC-Tool is recommended for further settings.
The connection of the tool is described on page 7

Function	Setting value / range	Operating device		Remarks, notes
		PC-Tool from V3.9	ZHT	
System-specific settings				
V max	20…100% of V nom	r / w	r / w	
V mid	V min … V max	r / w	r / w	
V min	0…100% of V nom	r / w	r / w	
Mode	0…10 V / 2…10 V	r / w	r / w	
Address	MP1…MP8 (16)	r / w	r / w	MP-Bus address
Position	16 characters	r / w	r	Display in operating and bus devices
Designation	16 characters	r / w	r	Display in operating and bus devices
Feedback U5 - function	Volumetric flow / damper position	r / w	---	
Installation height	0…3000 m above see level	r / w	r / w	
Unit-specific settings				
Nominal air velocity	3 / 5 / 7 m/s	r / w	---	Value is permanently set by the OEM
V nom	Unit-specific value	r	r	Related to nominal air velocity
Specific settings				
Override control	AUTO / OPEN / CLOSE / V min / V mid / V max / STOP	r / w	r / w	
Site adjustment factor	0,7…1,3	r / w	r / w	
Bus fail position	Last value/ OPEN / CLOSE / V min / V max	r / w	---	MP-Bus function: Behaviour with bus master failure
Display				
Duct temperature	Actual in the duct	r	r	
Air velocity	Actual in the duct	r	r	
Control loop display	Volume / setpoint / damper position	r	r	
Type	Type designation	r	r	
Version overview	Firmware	r	r	
Serial number	nnnnn-nnnnn-nnn-nnn	r	r	
Operating data	Operating time / running time / ratio	r	---	

Additional information is contained in the instructions for the respective tools

Installation height entry

The air density has an influence on the measurement system of the CMV-..-MP. This is strongly affected by the elevation above sea level of the current mounting position.

An additional parameter is available for increasing the measuring accuracy of the CMV-..-MP with which the elevation of the system can be entered.

Range: 0…3000 m above sea level

Upkeep and maintenance

The CMV-..-MP is in principle maintenance-free. A periodic visual check of the device and the checking of its perfect functioning is recommended.

Functional check

When dismantled:
1. Place the enclosed magnet on the marked point of the actuator housing.
2. Check the damper blade for free movement.
3. Do not fail to pull the magnet off again after testing.

In installed condition:
1. Connect ZTH to the CMV-..-MP.
2. Use the override control to move the damper CLOSED and OPEN and observe the respective changes of the volumetric flow air and the damper position.
3. After completed inspection switch back the override controls, into AUTO mode and disconnect the ZTH.

Cleaning instruction

The housing of the CMV-..-MP has been specially developed for low susceptibility to dirt. Nevertheless, periodic monitoring is recommended.

Cleaning:
Should dirt deposits nevertheless be found on the sensor, these can be carefully wiped away with a fine brush.
Do not use any hard objects or cleaning sprays for cleaning.

All-inclusive.

Switzerland

BELIMO Automation AG
Sales Switzerland
Brunnenbachstrasse 1
CH-8340 Hinwil, Switzerland
Tel. +41 (0)43 843 62 12
Fax +41 (0)43 843 62 66
verkch@belimo.ch
www.belimo.ch

Benelux

BELIMO Servomotoren BV
BENELUX
Postbus 300, NL-8160 AH Epe
Radeweg 25, NL-8171 MD
Vaassen
Tel. +31 (0)578 57 68 36
Fax +31 (0)578 57 69 15
info@belimo.nl
www.belimo.nl

Germany

BELIMO Stellantriebe
Vertriebs GmbH
Welfenstrasse 27
D-70599 Stuttgart
Tel. +49 (0)711 1 67 83-0
Fax +49 (0)711 1 67 83-73
info@belimo.de
www.belimo.de

At no charge

Order:
Tel. **0711 1 67 83-83**

Technical consultation:
Tel. **0711 1 67 83-84**

Fax **0711 1 67 83-73**

Personal consulting from Regional Sales Managers in:

Berlin, Hanover, Dusseldorf,
Leipzig, Frankfurt, Munich,
Hamburg, Stuttgart

Austria

BELIMO Automation
Handelsgesellschaft m.b.H.
Geiselbergstrasse 26-32
A-1110 Vienna, Austria
Tel. +43 (0)1 749 03 61-0
Fax +43 (0)1 749 03 61-99
info@belimo.at
www.belimo.at

Austria West

Tel. +43 (0)644 14 26 365
Fax +43 (0)732 70 10 51
dietmar.niederhametner@belimo.at

Hungary

Tel. +36 (06)20/920 46 16
Fax +36 (06)23/37 77 30
gabor.koeves@belimo.at

Slovakia

Tel. +43 (0)1 749 03 61-0
Fax +43 (0)1 749 03 61-99
info@belimo.at

Slovenia/Croatia/Bosnia

Tel. +386-(0)41-75 89 63
Fax +386-(0)4-2342-761
samo.smid@belimo.at

Serbia/Montenegro/
Macedonia/Bosnia

Tel./Fax +381-(0)11 311-9127
branimir.petrovic@belimo.at

Belimo worldwide: www.belimo.com

BELIMO®