Globe valve, 3-way, External thread

- For open and closed water systems
- For modulating control of air-handling and heating systems on the water side

Picture may differ from product

Type overview

Type	DN	G ["]	Kvs [m³/h]	Stroke	PN	n(gl)	Sv min.
H511B	15	1 1/8	0.63	15 mm	16	3	50
H512B	15	1 1/8	1	15 mm	16	3	50
H513B	15	1 1/8	1.6	15 mm	16	3	50
H514B	15	1 1/8	2.5	15 mm	16	3	50
H515B	15	1 1/8	4	15 mm	16	3	50
H520B	20	1 1/4	6.3	15 mm	16	3	100
H525B	25	1 1/2	10	15 mm	16	3	100
H532B	32	2	16	15 mm	16	3	100
H540B	40	2 1/4	25	15 mm	16	3	100
H550B	50	2 3/4	40	15 mm	16	3	100

Technical data

Functional data	Fluid	Water, water with glycol up to max. 50% vol.
	Fluid temperature	-10...120°C [14...248°F]
	Fluid temperature note	At a fluid temperature of -10...2°C, a spindle heating is needed.
	Flow characteristic	Control path A – AB: equal percentage (VDI/VDE 2173), optimised in the opening range, Bypass B – AB: linear (VDI/VDE 2173)
	Leakage rate	Control path A – AB: max. 0.05% of the Kvs value; Bypass B – AB: max. 1% of the Kvs value
	Closing point	Top (▲)
	Pipe connection	External thread according to ISO 228-1
	Installation orientation	upright to horizontal (in relation to the spindle)
	Servicing	maintenance-free
Materials	Valve body	CC499K
	Closing element	Stainless steel
	Spindle	Stainless steel
	Spindle seal	EPDM O-ring
	Seat	CC499K / stainless steel 1.4021 (bypass)

Safety notes

- The valve has been designed for use in stationary heating, ventilation and air-conditioning systems and must not be used outside the specified field of application, especially in aircraft or in any other airborne means of transport.
- Only authorised specialists may carry out installation. All applicable legal or institutional installation regulations must be complied with during installation.
- The valve does not contain any parts that can be replaced or repaired by the user.
- The valve may not be disposed of as household refuse. All locally valid regulations and requirements must be observed.
- When determining the flow rate characteristic of controlled devices, the recognised directives must be observed.

Product features

Operating mode

The globe valve is adjusted by a globe valve actuator. The actuators are controlled by a commercially available modulating or 3-point control system and move the valve cone, which acts as a mixing device, to the opening position dictated by the control signal.

Flow characteristic

An equal percentage flow characteristic in the flow direction is produced by the profile of the valve cone. The bypass exhibits a linear characteristic curve.

Fluid velocity

Standard values for low-noise operation in HVAC systems are fluid velocities of 1...2 m/s. At fluid velocities above 2 m/s, further flow effects like noise as well as cavitation can occur. This can reduce the service life of a valve depending on the situation.

Accessories

Electrical accessories

Description	Type
Stem heater for LV.., NV.., SV.. actuator	ZH24-1-A

Mechanical accessories

Description	Type
Pipe connector for globe valve with external thread DN 15 Rp 1/2"	ZH4515
Blanking connection for globe valve with external thread DN 15	ZH515
Pipe connector for globe valve with external thread DN 20 Rp 3/4"	ZH4520
Blanking connection for globe valve with external thread DN 20	ZH520
Pipe connector for globe valve with external thread DN 25 Rp 1"	ZH4525
Blanking connection for globe valve with external thread DN 25	ZH525
Pipe connector for globe valve with external thread DN 32 Rp 1 1/4"	ZH4532
Blanking connection for globe valve with external thread DN 32	ZH532
Pipe connector for globe valve with external thread DN 40 Rp 1 1/2"	ZH4540
Blanking connection for globe valve with external thread DN 40	ZH540
Pipe connector for globe valve with external thread DN 50 Rp 2"	ZH4550
Blanking connection for globe valve with external thread DN 50	ZH550

Installation notes

Permissible installation orientation

The globe valve may be mounted upright to horizontal. It is not permissible to mount the globe valves with the stem pointing downwards.

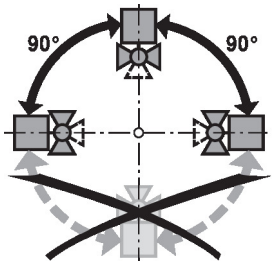

Installation notes

Water quality requirements

The water quality requirements specified in VDI 2035 must be adhered to.

Belimo valves are regulating devices. For the valves to function correctly in the long term, they must be kept free from particle debris (e.g. welding beads during installation work). The installation of a suitable strainer is recommended.

Servicing

Globe valves and globe valve actuators are maintenance-free.

Before any service work on the control element is carried out, it is essential to isolate the globe valve actuator from the power supply (by unplugging the electrical cables if necessary). Any pumps in the part of the piping system concerned must also be switched off and the appropriate slide valves closed (allow all components to cool down first if necessary and always reduce the system pressure to ambient pressure level).

The system must not be returned to service until the globe valve and the globe valve actuator have been reassembled correctly in accordance with the instructions and the pipeline has been refilled by professionally trained personnel.

Flow direction

The direction of flow, specified by an arrow on the housing, is to be complied with, since otherwise the valve could become damaged.

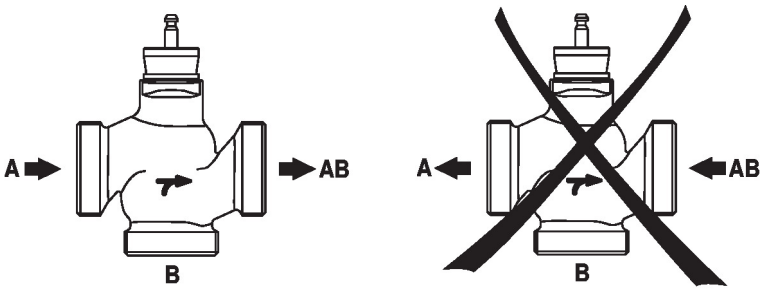

Differential and close-off pressure

The maximum differential and close-off pressure of globe valves depends on the mounted globe valve actuator. To ensure optimum operation and maximum service life, the maximum differential and close-off pressure in the table below must not be exceeded.

ps <1600 kPa (PN16) t= 5... 120°C		LV..A.. 500N		NV..A.. 1000N		SV..A.. 1500N	
	DN	Δps [kPa]	Δpmax [kPa]	Δps [kPa]	Δpmax [kPa]	Δps [kPa]	Δpmax [kPa]
H511B ... 15B	15	1300	400	1600	400	1600	400
H520B	20	900	400	1600	400	1600	400
H525B	25	500	400	1300	400	1600	400
H532B	32	350	350	1000	400	1600	400
H540B	40	150	150	500	400	900	400
H550B	50	70	70	300	300	550	400

Dimensions

Dimensional drawings

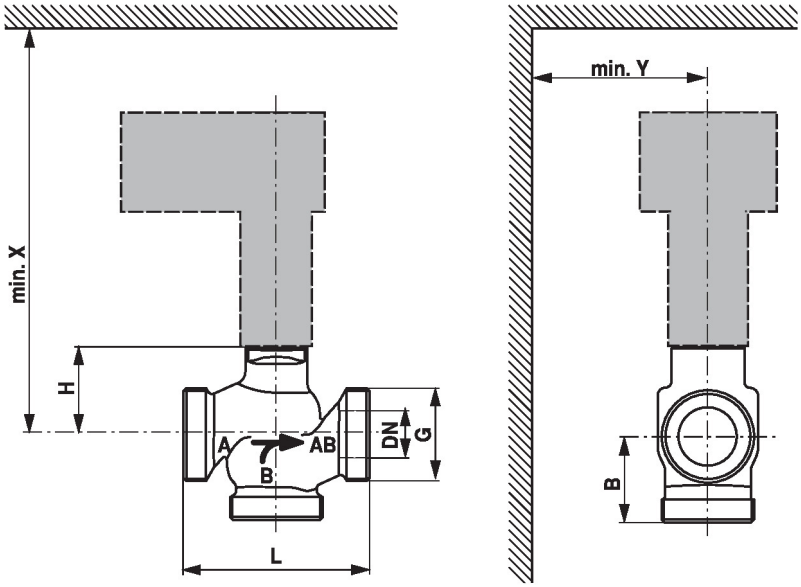

X/Y: Minimum distance with respect to the valve centre.
The actuator dimensions can be found on the respective actuator data sheet.

Type	DN	G ["]	L [mm]	B [mm]	H [mm]	X [mm]	Y [mm]	kg
H511B	15	1 1/8	80	55	46	290	100	1.9
H512R	15	1 1/8	80	55	46	290	100	1.9
H513B	15	1 1/8	80	55	46	290	100	1.9
H514B	15	1 1/8	80	55	46	290	100	1.9
H515B	15	1 1/8	80	55	46	290	100	1.9
H520B	20	1 1/4	90	55	46	290	100	2.0
H525B	25	1 1/2	110	55	52	300	100	2.2
H532B	32	2	120	55	56	300	100	2.7
H540B	40	2 1/4	130	60	65	310	100	3.2
H550B	50	2 3/4	150	65	65	310	100	4.1

Further documentation

- The complete product range for water applications
- Data sheets for globe valve actuators
- Installation instructions for valves and/or globe valve actuators
- Notes for project planning 2-way and 3-way globe valves