Characterised control valve, 2-way, Internal thread

- For open and closed water systems
- For modulating control of air-handling and heating systems on the water side
- Air-bubble tight

Picture may differ from product

Type overview

Type	DN	Rp ["]	Kvs [m³/h]	PN	n(gl)	Sv min.
R2015-P25-S1	15	1/2	0.25	40	3.2	50
R2015-P4-S1	15	1/2	0.4	40	3.2	50
R2015-P63-S1	15	1/2	0.63	40	3.2	50
R2015-1-S1	15	1/2	1	40	3.2	50
R2015-1P6-S1	15	1/2	1.6	40	3.2	50
R2015-2P5-S1	15	1/2	2.5	40	3.2	50
R2015-4-S1	15	1/2	4	40	3.2	100
R2015-6P3-S1	15	1/2	6.3	40	3.2	100
R2020-4-S2	20	3/4	4	40	3.2	100
R2020-6P3-S2	20	3/4	6.3	40	3.2	100
R2020-8P6-S2	20	3/4	8.6	40	3.2	100
R2025-6P3-S2	25	1	6.3	40	3.2	100
R2025-10-S2	25	1	10	40	3.2	100
R2025-16-S2	25	1	16	40	3.2	100
R2032-16-S3	32	1 1/4	16	25	3.2	100
R2040-16-S3	40	1 1/2	16	25	3.2	100
R2040-25-S3	40	1 1/2	25	25	3.2	100
R2050-25-S4	50	2	25	25	3.2	100
R2050-40-S4	50	2	40	25	3.2	100

Technical data

Functional data	Fluid	Water, water with glycol up to max. 50% vol.
	Fluid temperature	-10...120°C [14...248°F]
	Fluid temperature note	At a fluid temperature of -10...2°C, a spindle heater or a valve neck extension is recommended. The allowed fluid temperature can be limited, depending on the type of actuator. Limitations can be found in the respective data sheets of the actuators.
	Close-off pressure Δps	1400 kPa
	Differential pressure Δpmax	350 kPa
	Differential pressure note	200 kPa for low-noise operation
	Flow characteristic	equal percentage (VDI/VDE 2173), optimised in the opening range
	Leakage rate	air-bubble tight, leakage rate A (EN 12266-1)
	Angle of rotation	90°

Technical data

Functional data	Angle of rotation note	Operating range 15...90°
	Pipe connection	Internal thread according to ISO 7-1
	Installation orientation	upright to horizontal (in relation to the spindle)
	Servicing	maintenance-free
Materials	Valve body	nickel-plated brass body
	Body finish	nickel-plated
	Closing element	Stainless steel
	Spindle	Stainless steel
	Spindle seal	EPDM O-ring
	Seat	PTFE, O-ring EPDM
	Characterised disc	ETFE

Safety notes

- The valve has been designed for use in stationary heating, ventilation and air-conditioning systems and must not be used outside the specified field of application, especially in aircraft or in any other airborne means of transport.
- Only authorised specialists may carry out installation. All applicable legal or institutional installation regulations must be complied with during installation.
- The valve does not contain any parts that can be replaced or repaired by the user.
- The valve may not be disposed of as household refuse. All locally valid regulations and requirements must be observed.
- When determining the flow rate characteristic of controlled devices, the recognised directives must be observed.

Product features

Operating mode

The characterised control valve is adjusted by a rotary actuator. The actuator is controlled by a commercially available modulating or 3-point control system and moves the ball of the valve – the throttling device – to the position dictated by the control signal. Open the characterised control valve counterclockwise and close it clockwise.

Flow characteristic

Equal percentage flow control is ensured by the integrated characterising disc.

Accessories

Electrical accessories

Description	Type
Stem heater for ball valve DN 15...50, AC/DC 24 V, 20 W	ZR24-2

Mechanical accessories

Description	Type
Valve neck extension for ball valve DN 15...50	ZR-EXT-01
Pipe connector for ball valve with internal thread DN 15 Rp 1/2"	ZR2315
Pipe connector for ball valve with internal thread DN 20 Rp 3/4"	ZR2320
Pipe connector for ball valve with internal thread DN 25 Rp 1"	ZR2325
Pipe connector for ball valve with internal thread DN 32 Rp 1 1/4"	ZR2332
Pipe connector for ball valve with internal thread DN 40 Rp 1 1/2"	ZR2340
Pipe connector for ball valve with internal thread DN 50 Rp 2"	ZR2350

Installation notes

Permissible installation orientation

The ball valve can be installed upright to horizontal. The ball valve may not be installed in a hanging position, i.e. with the spindle pointing downwards.

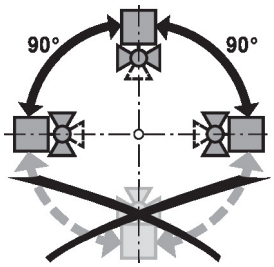

Water quality requirements

The water quality requirements specified in VDI 2035 must be adhered to.

Belimo valves are regulating devices. For the valves to function correctly in the long term, they must be kept free from particle debris (e.g. welding beads during installation work). The installation of a suitable strainer is recommended.

Servicing

Ball valves and rotary actuators are maintenance-free.

Before any service work on the control element is carried out, it is essential to isolate the rotary actuator from the power supply (by unplugging the electrical cable if necessary). Any pumps in the part of the piping system concerned must also be switched off and the appropriate slide valves closed (allow all components to cool down first if necessary and always reduce the system pressure to ambient pressure level).

The system must not be returned to service until the ball valve and the rotary actuator have been correctly reassembled in accordance with the instructions and the pipeline has been refilled by professionally trained personnel.

Flow direction

The direction of flow, specified by an arrow on the housing, is to be complied with, since otherwise the ball valve could become damaged. Please ensure that the ball is in the correct position (marking on the spindle).

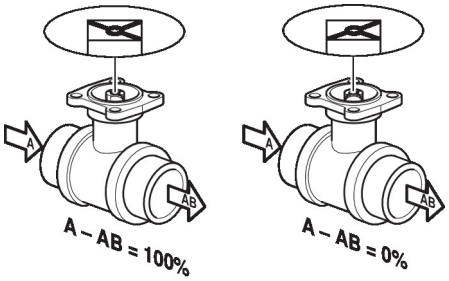

Dimensions

Dimensional drawings

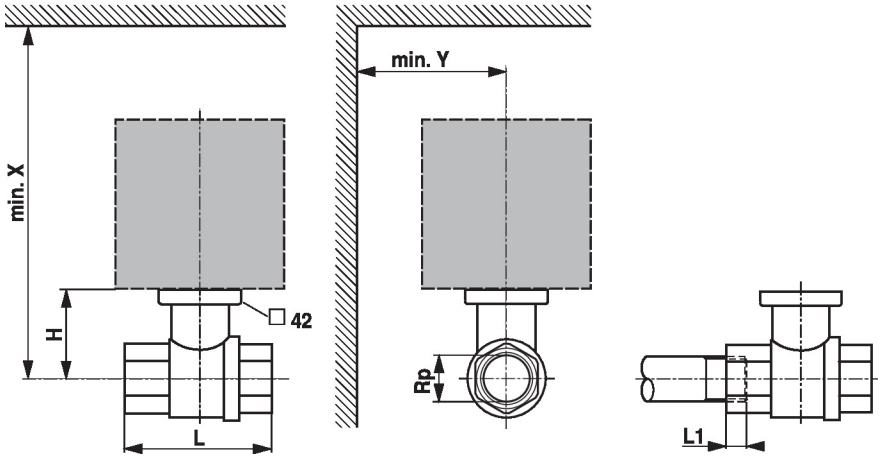

L1: Maximum screwing depth.
X/Y: Minimum distance with respect to the valve centre.
The actuator dimensions can be found on the respective actuator data sheet.

Type	DN	Rp ["]	L [mm]	L1 [mm]	H [mm]	X [mm]	Y [mm]	kg
R2015-P25-S1	15	1/2	67	13	35	230	90	0.24
R2015-P4-S1	15	1/2	67	13	35	230	90	0.24
R2015-P63-S1	15	1/2	67	13	35	230	90	0.24
R2015-1-S1	15	1/2	67	13	35	230	90	0.24
R2015-1P6-S1	15	1/2	67	13	35	230	90	0.24
R2015-2P5-S1	15	1/2	67	13	44	230	90	0.31
R2015-4-S1	15	1/2	67	13	44	230	90	0.31
R2015-6P3-S1	15	1/2	67	13	44	230	90	0.31
R2020-4-S2	20	3/4	78	14	46	235	90	0.43
R2020-6P3-S2	20	3/4	78	14	46	235	90	0.43
R2020-8P6-S2	20	3/4	78	14	46	235	90	0.43
R2025-6P3-S2	25	1	87	16	46	235	90	0.51
R2025-10-S2	25	1	87	16	46	235	90	0.50
R2025-16-S2	25	1	87	16	46	235	90	0.50
R2032-16-S3	32	1 1/4	105	19	50.5	240	90	0.75
R2040-16-S3	40	1 1/2	111	19	50.5	240	90	0.92
R2040-25-S3	40	1 1/2	111	19	50.5	240	90	0.92
R2050-25-S4	50	2	125	22	56	245	90	1.4
R2050-40-S4	50	2	125	22	56	245	90	1.4

Further documentation

- The complete product range for water applications
- Data sheets for actuators
- Installation instructions for actuators and/or ball valves
- General notes for project planning