Open/close ball valve, 2-way, External thread

- For open and closed water systems
- For modulating control on the water side of domestic water in district heating applications. Heated potable water on request.
- Air-bubble tight

Picture may differ from product

Type overview

Type	DN	G ["]	Kvs [m³/h]	PN
R410DK	10	3/4	4	40
R415D	15	1	12	40
R420D	20	1 1/4	25	40

Technical data

Functional data	Fluid	Water, potable water (on request), water with glycol up to max. 50% vol.
	Fluid temperature	2...130°C [36...266°F]
	Fluid temperature note	The allowed fluid temperature can be limited, depending on the type of actuator. Limitations can be found in the respective data sheets of the actuators.
	Close-off pressure Δps	1400 kPa
	Differential pressure Δpmax	800 kPa
	Leakage rate	air-bubble tight, leakage rate A (EN 12266-1)
	Angle of rotation	90°
	Pipe connection	External thread according to ISO 228-1
	Installation orientation	upright to horizontal (in relation to the spindle)
	Servicing	maintenance-free
Materials	Valve body	Low lead red brass (CuSn4Zn6Pb3)
	Closing element	Stainless steel
	Spindle	Stainless steel
	Spindle end	Brass CW 614 N (DN 10, 15) Plastic (PA66 GF30%) (DN 20)
	Spindle seal	FKM
	Spindle bearing	PTFE
	Seat	ETFE
	Grease	Unisilicone (potable water grade)
	Thermal block	Plastic (PA66 GF30%)
	Diffuser	ETFE

Safety notes

- The valve has been designed for use in stationary heating, ventilation and air-conditioning systems and must not be used outside the specified field of application, especially in aircraft or in any other airborne means of transport.
- Only authorised specialists may carry out installation. All applicable legal or institutional installation regulations must be complied with during installation.
- The valve does not contain any parts that can be replaced or repaired by the user.
- The valve may not be disposed of as household refuse. All locally valid regulations and requirements must be observed.
- When determining the flow rate characteristic of controlled devices, the recognised directives must be observed.
- National regulations must be observed when using the ball valve in potable water applications.

Product features

Operating mode

The open/close ball valve is adjusted by a rotary actuator. The rotary actuator is controlled by an open/close signal. Open the ball valve counterclockwise and close it clockwise.

Accessories

Mechanical accessories

Description	Type
Pipe connector for ball valve with external thread DN 10 Rp 3/8"	ZR4510
Pipe connector for ball valve with external thread DN 15 Rp 1/2"	ZR4515
Pipe connector for ball valve with external thread DN 20 Rp 3/4"	ZR4520

Installation notes

Permissible installation orientation

The ball valve can be installed upright to horizontal. The ball valve may not be installed in a hanging position, i.e. with the spindle pointing downwards.

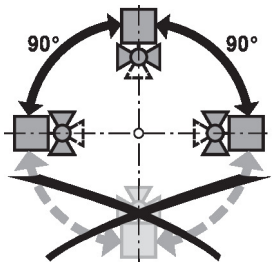

Water quality requirements

The water quality requirements specified in VDI 2035 must be adhered to.

Belimo valves are regulating devices. For the valves to function correctly in the long term, they must be kept free from particle debris (e.g. welding beads during installation work). The installation of a suitable strainer is recommended.

Servicing

Ball valves and rotary actuators are maintenance-free.

Before any service work on the control element is carried out, it is essential to isolate the rotary actuator from the power supply (by unplugging the electrical cable if necessary). Any pumps in the part of the piping system concerned must also be switched off and the appropriate slide valves closed (allow all components to cool down first if necessary and always reduce the system pressure to ambient pressure level).

The system must not be returned to service until the ball valve and the rotary actuator have been correctly reassembled in accordance with the instructions and the pipeline has been refilled by professionally trained personnel.

Installation notes

Flow direction

The direction of flow, specified by an arrow on the housing, is to be complied with, since otherwise the ball valve could become damaged. Please ensure that the ball is in the correct position (marking on the spindle).

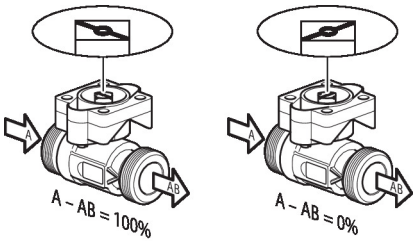

Dimensions

Dimensional drawings

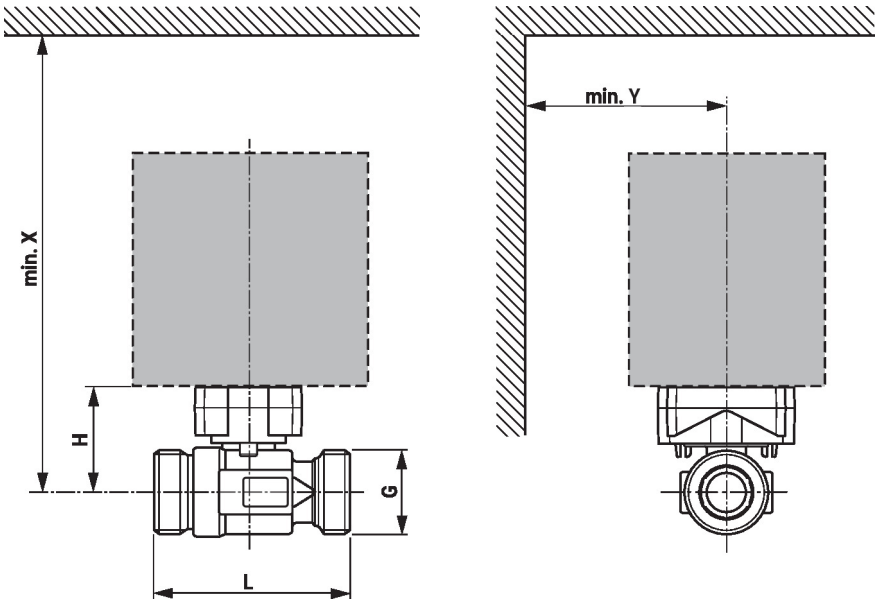

X/Y: Minimum distance with respect to the valve centre.
The actuator dimensions can be found on the respective actuator data sheet.

Type	DN	G [“]	L [mm]	H [mm]	X [mm]	Y [mm]	kg
R410DK	10	3/4	65	38	190	70	0.25
R415D	15	1	75	42	195	70	0.37
R420D	20	1 1/4	107	55	200	70	0.76

Further documentation

- The complete product range for water applications
- Data sheets for actuators
- Installation instructions for actuators and/or ball valves
- General notes for project planning