Modulating rotary actuator fail-safe for rotary valves and butterfly valves

- Torque motor 40 Nm
- Nominal voltage AC/DC 24 V
- Control modulating 0.5...10 V
- Position feedback 0.5...10 V

Picture may differ from product

Technical data

Electrical data	Nominal voltage	AC/DC 24 V
	Nominal voltage frequency	50/60 Hz
	Nominal voltage range	AC 19.2...28.8 V / DC 21.6...28.8 V
	Power consumption in operation	11 W
	Power consumption in rest position	3 W
	Power consumption for wire sizing	21 VA
	Inrush current (Imax)	20.0 A @ 5 ms
	Connection supply / control	Cable 1 m, 4x 0.75 mm²
	Parallel operation	Yes (note the performance data)
Functional data	Torque motor	40 Nm
	Operating range Y	0.5...10 V
	Input impedance	100 kΩ
	Position feedback U	0.5...10 V
	Position feedback U note	Max. 0.5 mA
	Setting fail-safe position	NC/NO or adjustable 0...100% (POP rotary knob)
	Bridging time (PF)	2 s
	Position accuracy	±5%
	Manual override	with push-button
	Running time motor	150 s / 90°
	Running time fail-safe	35 s / 90°
	Sound power level, motor	52 dB(A)
	Sound power level, fail-safe	61 dB(A)
	Position indication	Mechanical
Safety data	Protection class IEC/EN	III, Safety Extra-Low Voltage (SELV)
	Power source UL	Class 2 Supply
	Degree of protection IEC/EN	IP54
	Degree of protection NEMA/UL	NEMA 2
	Housing	UL Enclosure Type 2
	EMC	CE according to 2014/30/EU
	Certification IEC/EN	IEC/EN 60730-1 and IEC/EN 60730-2-14
	UL Approval	cULus according to UL60730-1A, UL60730-2-14 and CAN/CSA E60730-1 The UL marking on the actuator depends on the production site, the device is UL-compliant in any case
	Type of action	Type 1.AA
	Rated impulse voltage supply / control	0.8 kV
	Pollution degree	3

Technical data

Safety data	Ambient humidity	Max. 95% RH, non-condensing
	Ambient temperature	-30...50°C [-22...122°F]
	Storage temperature	-40...80°C [-40...176°F]
	Servicing	maintenance-free
Mechanical data	Connection flange	F05
Weight	Weight	2.5 kg
Terms	Abbreviations	POP = Power off position / fail-safe position CPO = Controlled power off / controlled fail-safe PF = Power fail delay time / bridging time

Safety notes

- This device has been designed for use in stationary heating, ventilation and air-conditioning systems and must not be used outside the specified field of application, especially in aircraft or in any other airborne means of transport.
- Outdoor application: Only possible if no (sea) water, snow, ice, sunlight or aggressive gases act directly on the device and if it is ensured that the ambient conditions remain within the limit values specified in the data sheet at all times.
- Only authorised specialists may carry out installation. All applicable legal or institutional installation regulations must be complied with during installation.
- The switch for changing the direction of rotation may only be operated by authorised specialists. The direction of rotation must not in particular be reversed in a frost protection circuit.
- The device may only be opened at the manufacturer's site. It does not contain any parts that can be replaced or repaired by the user.
- Cables must not be removed from the device.
- The device contains electrical and electronic components and must not be disposed of as household refuse. All locally valid regulations and requirements must be observed.

Product features

Operating mode The actuator moves the valve to the desired operating position at the same time as the integrated capacitors are loaded. Interrupting the supply voltage causes the valve to be moved to the selected fail-safe position by means of stored electrical energy.

Product features

Pre-charging time (start up)

The capacitor actuators require a pre-charging time. This time is used for charging the capacitors up to a usable voltage level. This ensures that, in the event of a power failure, the actuator can move at any time from its current position into the preset fail-safe position. The duration of the pre-charging time depends mainly on how long the power was interrupted.

Typical pre-charging time

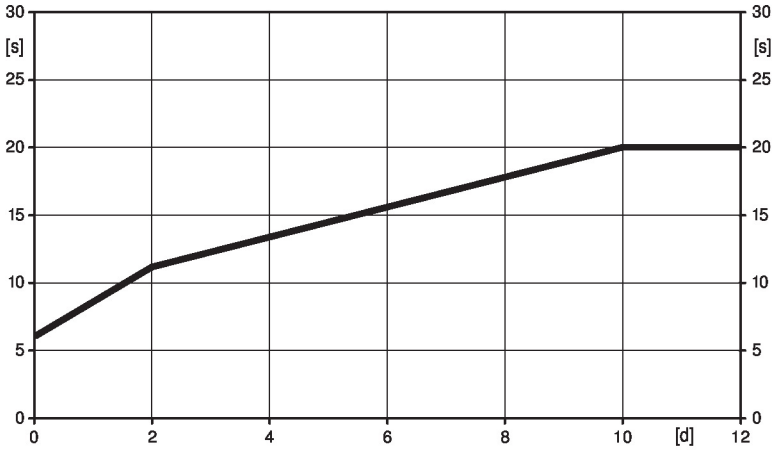

[d] = Power failure in days
[s] = Pre-charging time in seconds

	[d]				
	0	1	2	7	≥10
[s]	6	9	11	16	20

Delivery condition (capacitors)

The actuator is completely discharged after delivery from the factory, which is why the actuator requires approximately 20 s pre-charging time before initial commissioning in order to bring the capacitors up to the required voltage level.

Setting fail-safe position (POP)

The rotary knob fail-safe position can be used to adjust the desired fail-safe position 0...100% in 10% increments. The rotary knob always refers to the adapted angle of rotation range. In the event of a power failure, the actuator will move into the selected fail-safe position.

Simple direct mounting

Simple direct mounting on the rotary valve or butterfly valve with mounting flange. The mounting orientation in relation to the fitting can be selected in 90° steps.

Manual override

Manual control with push-button possible - temporary. The gear train is disengaged and the actuator decoupled for as long as the button is pressed.

Adjustable angle of rotation

Adjustable angle of rotation with mechanical end stops.

High functional reliability

The actuator is overload protected, requires no limit switches and automatically stops when the end stop is reached.

Setting direction of motion

When actuated, the direction of the rotation switch changes the running direction in normal operation. The direction of the rotation switch has no influence on the fail-safe position which has been set.

Accessories

Electrical accessories

Description	Type
Auxiliary switch 1x SPDT add-on	S1A
Auxiliary switch 2x SPDT add-on	S2A
Feedback potentiometer 140 Ω add-on	P140A
Feedback potentiometer 1 kΩ add-on	P1000A
Feedback potentiometer 10 kΩ add-on	P10000A

Electrical installation

Supply from isolating transformer.

Parallel connection of other actuators possible. Observe the performance data.

Direction of rotation switch Factory setting: Direction of rotation Y2.

Electrical installation

Wire colours:
1 = black
2 = red
3 = white
5 = orange

AC/DC 24 V, modulating

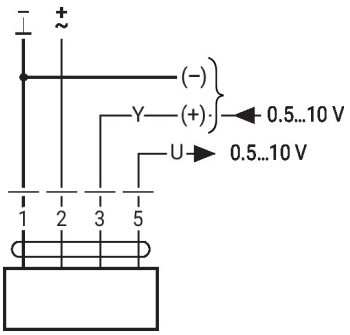

Override control (frost protection circuit)

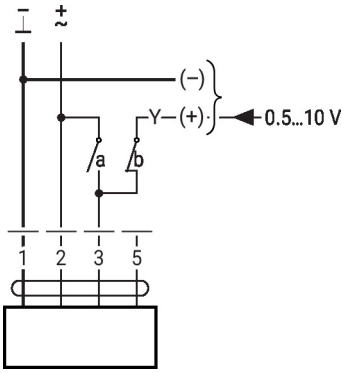

1	2	3 (a)	3 (b)	
				A–AB = 100%
				A–AB = 0%
			0.5 V	A–AB = 0%
			10 V	A–AB = 100%

Operating controls and indicators

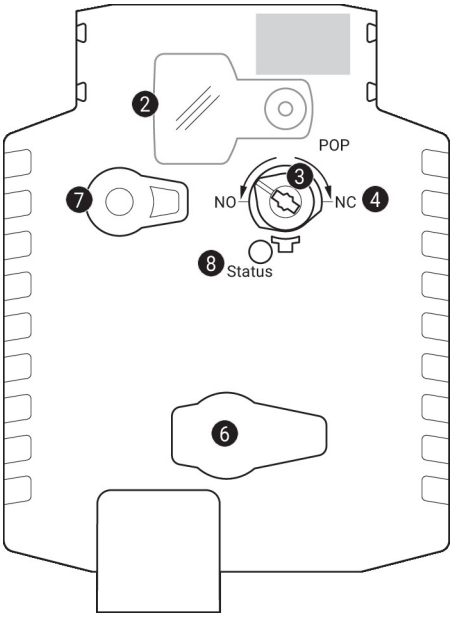

2 **Cover, POP button**

3 **POP button**

4 **Scale for manual adjustment**

6 (no function)

7 **Manual override button**

Press button: Gear train disengages, motor stops, manual override possible
Release button: Gear train engages, standard mode

LED displays

green 8	Meaning / function
On	Operation OK
Flashing	POP function active
Off	- Not in operation - Pre-charging time SuperCap - Fault SuperCap

Operating controls and indicators

Setting fail-safe position (POP)

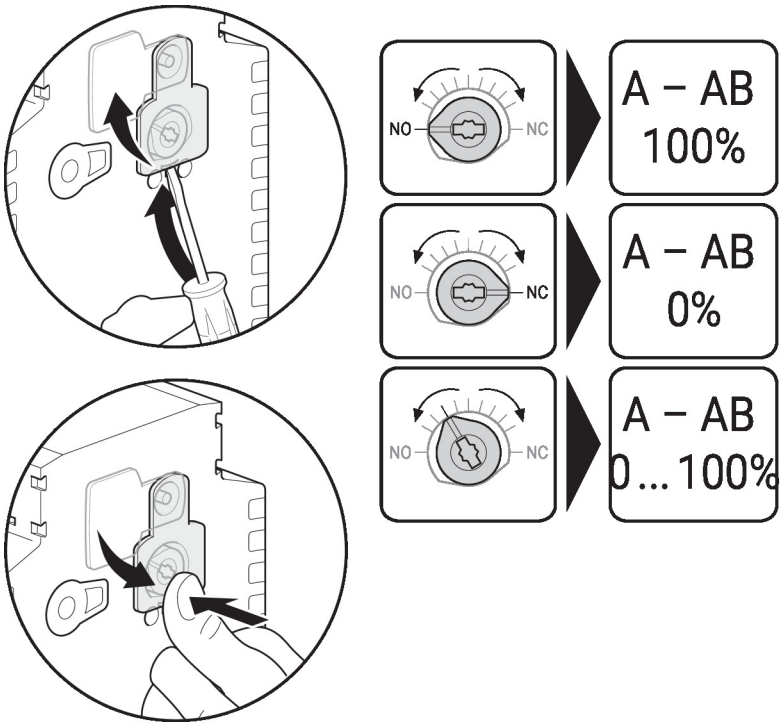

Dimensions

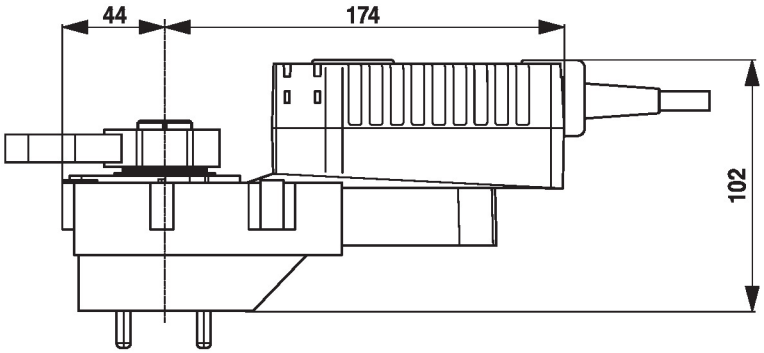

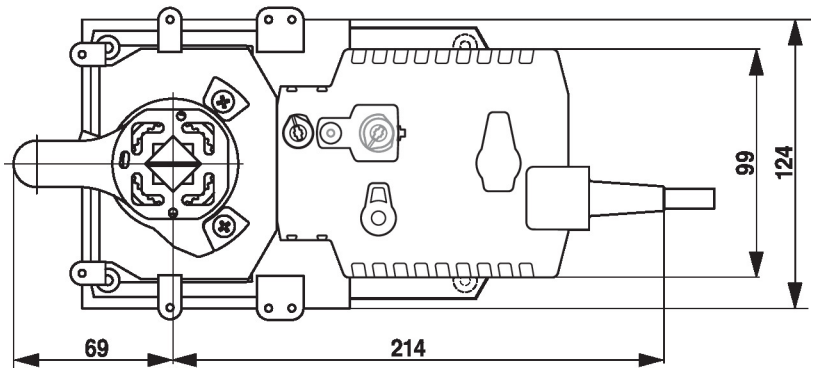

Further documentation

- The complete product range for water applications
- Data sheets for rotary valves and butterfly valves
- Installation instructions for actuators and/or rotary valves and butterfly valves
- General notes for project planning