Globe valve actuator for 2-way and 3-way globe valves

- Actuating force 2500 N
- Nominal voltage AC 100...240 V
- Control Open/close, 3-point
- Stroke 50 mm

Picture may differ from product

Technical data

Electrical data	Nominal voltage	AC 100...240 V
	Nominal voltage frequency	50/60 Hz
	Nominal voltage range	AC 85...265 V
	Power consumption in operation	5.5 W
	Power consumption in rest position	1 W
	Power consumption for wire sizing	9.5 VA
	Connection supply / control	Terminals 4 mm² (cable ø4...10 mm)
	Parallel operation	Yes (note the performance data)
Functional data	Actuating force motor	2500 N
	Manual override	with push-button, can be locked
	Stroke	50 mm
	Running time motor	150 s / 40 mm (188 s / 50 mm)
	Sound power level, motor	56 dB(A)
	Position indication	Mechanical, 5...50 mm stroke
Safety data	Protection class IEC/EN	II, reinforced insulation
	Power source UL	Class 2 Supply
	Degree of protection IEC/EN	IP54
	Degree of protection NEMA/UL	NEMA 2
	Housing	UL Enclosure Type 2
	EMC	CE according to 2014/30/EU
	Low voltage directive	CE according to 2014/35/EU
	Certification IEC/EN	IEC/EN 60730-1 and IEC/EN 60730-2-14
	UL Approval	cULus according to UL60730-1A, UL60730-2-14 and CAN/CSA E60730-1 The UL marking on the actuator depends on the production site, the device is UL-compliant in any case
	Type of action	Type 1
	Rated impulse voltage supply / control	4 kV
	Pollution degree	3
	Ambient humidity	Max. 95% RH, non-condensing
	Ambient temperature	0...50°C [32...122°F]
	Storage temperature	-40...80°C [-40...176°F]
	Servicing	maintenance-free
Weight	Weight	3.3 kg

Safety notes

- This device has been designed for use in stationary heating, ventilation and air-conditioning systems and must not be used outside the specified field of application, especially in aircraft or in any other airborne means of transport.
- Outdoor application: Only possible if no (sea) water, snow, ice, sunlight or aggressive gases act directly on the device and if it is ensured that the ambient conditions remain within the limit values specified in the data sheet at all times.
- Only authorised specialists may carry out installation. All applicable legal or institutional installation regulations must be complied with during installation.
- The switch for changing the direction of motion and so the closing point may be adjusted only by authorised specialists. The direction of motion is critical, particularly in connection with frost protection circuits.
- The device may only be opened at the manufacturer's site. It does not contain any parts that can be replaced or repaired by the user.
- The device contains electrical and electronic components and must not be disposed of as household refuse. All locally valid regulations and requirements must be observed.

Product features

Mounting on third-party valves
The RetroFIT+ actuators for installation on a wide range of valves from various manufacturers are comprised of an actuator, universal valve neck adapter and universal valve stem adapter. Adapt the valve neck and valve stem to begin with, then attach the RetroFIT+ actuator to the valve neck adapter, connect to the valve and start up. The valve neck adapter/actuator can be rotated by 360° on the valve neck, provided the size of the installed valve permits.

Mounting on Belimo valves
Use standard actuators from Belimo for mounting on Belimo globe valves.

Manual override
Manual override with push-button possible (the gear train is disengaged for as long as the button is pressed or remains locked).

The stroke can be adjusted by using a hexagon socket screw key (5 mm), which is inserted into the top of the actuator. The stem extends when the key is rotated clockwise.

High functional reliability
The actuator is overload protected, requires no limit switches and automatically stops when the end stop is reached.

Position indication
The stroke is indicated mechanically on the bracket with tabs. The stroke range adjusts itself automatically during operation.

Home position
Factory setting: Actuator stem is retracted.

Setting direction of motion
When actuated, the direction-of-stroke switch changes the direction of motion in normal operation.

Restriction 3-point controller
It must be ensured that the pulsating 3-point controller stops when the end position is reached. This can be ensured through an additional auxiliary switch (S2A-H). If this is not possible on the system side, the multifunctional 24 V version of the actuator (..V24A-MP-..) must be used. This actuator must be configured as a 3-point control via Belimo Assistant 2 with the LINK.10

Accessories

Electrical accessories

Description	Type
Auxiliary switch 2x SPDT add-on	S2A-H

Mechanical accessories

Description	Type
Spacer ring for Sauter, stroke 50 mm	ZRV-301
Spacer ring for Siebe, stroke 50 mm	ZRV-302
Spacer ring for Johnson Control, stroke 50 mm	ZRV-303
Washer Sauter for Sauter, stroke 50 mm	ZRV-304

Electrical installation

Caution: Mains voltage!

Parallel connection of other actuators possible. Observe the performance data.

Direction of stroke switch factory setting: Actuator stem retracted (▲).

AC 230 V, open/close

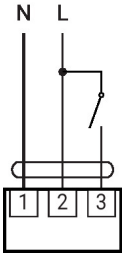

AC 230 V, 3-point

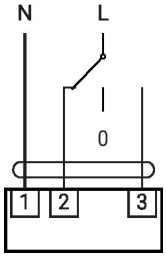

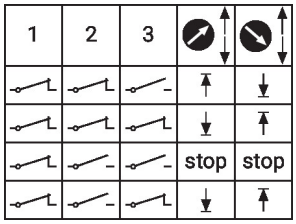

Further electrical installations

Functions with basic values (conventional mode)

AC 230 V, 3-point with auxiliary switch

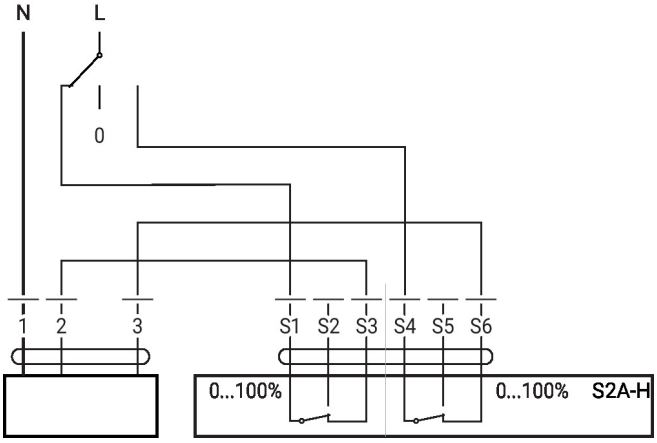

Operating controls and indicators

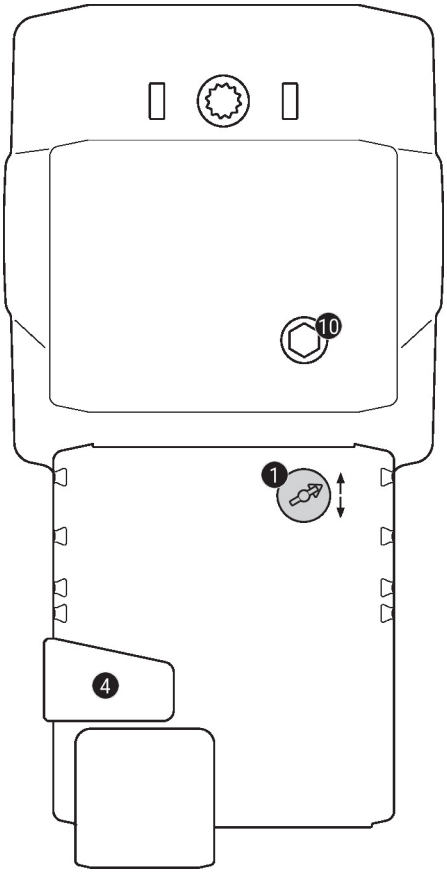

1 Direction of stroke switch

Switch over:	Direction of stroke changes

4 Manual override button

Press button:	Gear train disengages, motor stops, manual override possible
Release button:	Gear train engages, standard mode

10 Manual override

Clockwise:	Actuator stem extends
Counterclockwise:	Actuator stem retracts

Dimensions

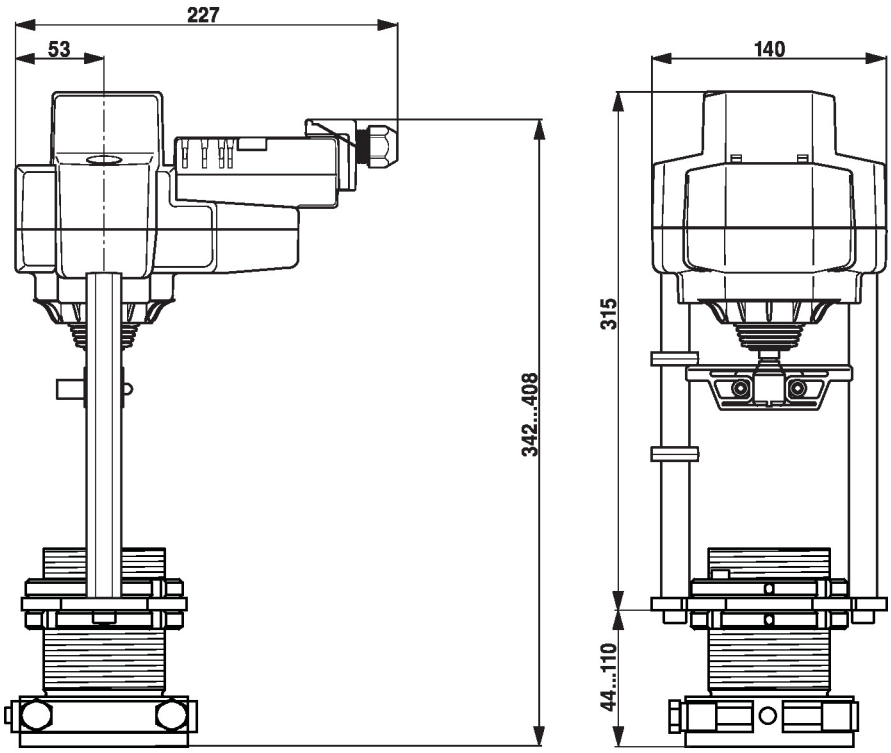

Further documentation

- Installation instructions for actuators