Globe valve, 3-way, Flange

- For closed water systems
- For modulating control of air-handling and heating systems on the water side

Picture may differ from product

Type overview

Type	DN	Kvs [m³/h]	Stroke	PN	Sv min.
H7015X4-S2	15	4	20 mm	25	30
H7020X6P3-S2	20	6.3	20 mm	25	50
H7025X10-S2	25	10	20 mm	25	50
H7032X16-S2	32	16	20 mm	25	50
H7040X25-S2	40	25	20 mm	25	50
H7050X40-S2	50	40	20 mm	25	50
H7065X63-S4	65	63	30 mm	25	50
H7080X100-S4	80	100	30 mm	25	50
H7100X160-S4	100	160	30 mm	25	50

Technical data

Functional data	Fluid	Water, water with glycol up to max. 50% vol.
	Fluid temperature	5...200°C [41...392°F]
	Fluid temperature note	120°C up to 2500 kPa 200°C up to 2300 kPa
	Flow characteristic	Control path A – AB: linear (VDI/VDE 2173), Bypass B – AB: linear (VDI/VDE 2173)
	Leakage rate	Control path A – AB: max. 0.05% of the Kvs value; Bypass B – AB: max. 1% of the Kvs value
	Closing point	Top (▲)
	Pipe connection	Flange according to ISO 7005-2
	Installation orientation	upright to horizontal (in relation to the spindle)
	Servicing	maintenance-free
Materials	Valve body	EN-GJS-400-18-LT (GGG 40.3)
	Body finish	with protective paint
	Closing element	Stainless steel
	Spindle	Stainless steel
	Spindle seal	PTFE V-ring
	Seat	Stainless steel

Safety notes

- The valve has been designed for use in stationary heating, ventilation and air-conditioning systems and must not be used outside the specified field of application, especially in aircraft or in any other airborne means of transport.
- Only authorised specialists may carry out installation. All applicable legal or institutional installation regulations must be complied with during installation.
- The valve does not contain any parts that can be replaced or repaired by the user.
- The valve may not be disposed of as household refuse. All locally valid regulations and requirements must be observed.
- When determining the flow rate characteristic of controlled devices, the recognised directives must be observed.

Product features

Operating mode

The globe valve is adjusted by a globe valve actuator. The actuators are controlled by a commercially available modulating or 3-point control system and move the valve cone, which acts as a mixing device, to the opening position dictated by the control signal.

Flow characteristic

A linear flow characteristic is produced in the direction of flow by the profile of the valve cone. The bypass exhibits a linear characteristic curve.

Fluid velocity

Standard values for low-noise operation in HVAC systems are fluid velocities of 1...2 m/s. At fluid velocities above 2 m/s, further flow effects like noise as well as cavitation can occur. This can reduce the service life of a valve depending on the situation.

Accessories

Electrical accessories

Description	Type
Stem heater	ZH24-1-A

Installation notes

Permissible installation orientation

The globe valve may be mounted upright to horizontal. It is not permissible to mount the globe valves with the stem pointing downwards.

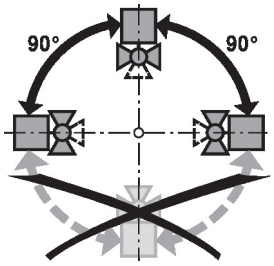

Water quality requirements

The water quality requirements specified in VDI 2035 must be adhered to.

Belimo valves are regulating devices. For the valves to function correctly in the long term, they must be kept free from particle debris (e.g. welding beads during installation work). The installation of a suitable strainer is recommended.

Servicing

Globe valves and globe valve actuators are maintenance-free.

Before any service work on the control element is carried out, it is essential to isolate the globe valve actuator from the power supply (by unplugging the electrical cables if necessary). Any pumps in the part of the piping system concerned must also be switched off and the appropriate slide valves closed (allow all components to cool down first if necessary and always reduce the system pressure to ambient pressure level).

The system must not be returned to service until the globe valve and the globe valve actuator have been reassembled correctly in accordance with the instructions and the pipeline has been refilled by professionally trained personnel.

Installation notes

Flow direction

The direction of flow, specified by an arrow on the housing, is to be complied with, since otherwise the valve could become damaged.

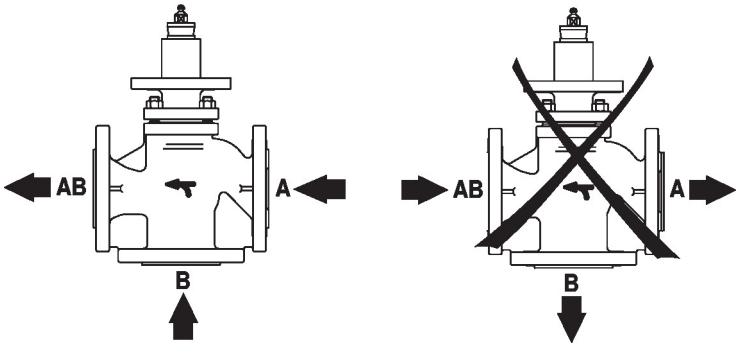

Differential and close-off pressure

The maximum differential and close-off pressure of globe valves depends on the mounted globe valve actuator. To ensure optimum operation and maximum service life, the maximum differential and close-off pressure in the table below must not be exceeded.

p_s <2500 kPa (PN25) t= 5... 120°C p_s <2300 kPa (PN25) t= 121... 200°C		NV..A.. 1000N		SV..A.. 1500N		AVK..A.. 2000N		EV..A.. 2500N		RV..A.. 4500N	
	DN	Δps [kPa]	Δpmax [kPa]	Δps [kPa]	Δpmax [kPa]	Δps [kPa]	Δpmax [kPa]	Δps [kPa]	Δpmax [kPa]	Δps [kPa]	Δpmax [kPa]
H7015X4-S2	15	2200	1000	2500	1000						
H7020X6P3-S2	20	1500	1000	2500	1000						
H7025X10-S2	25	1300	1000	2100	1000						
H7032X16-S2	32	900	900	1500	1000						
H7040X25-S2	40	500	500	850	850						
H7050X40-S2	50	300	300	500	500						
H7065X63-S4	65					400	400	550	550	1100	1000
H7080X100-S4	80					250	250	350	350	700	700
H7100X160-S4	100					150	150	200	200	450	450

Dimensions

Dimensional drawings

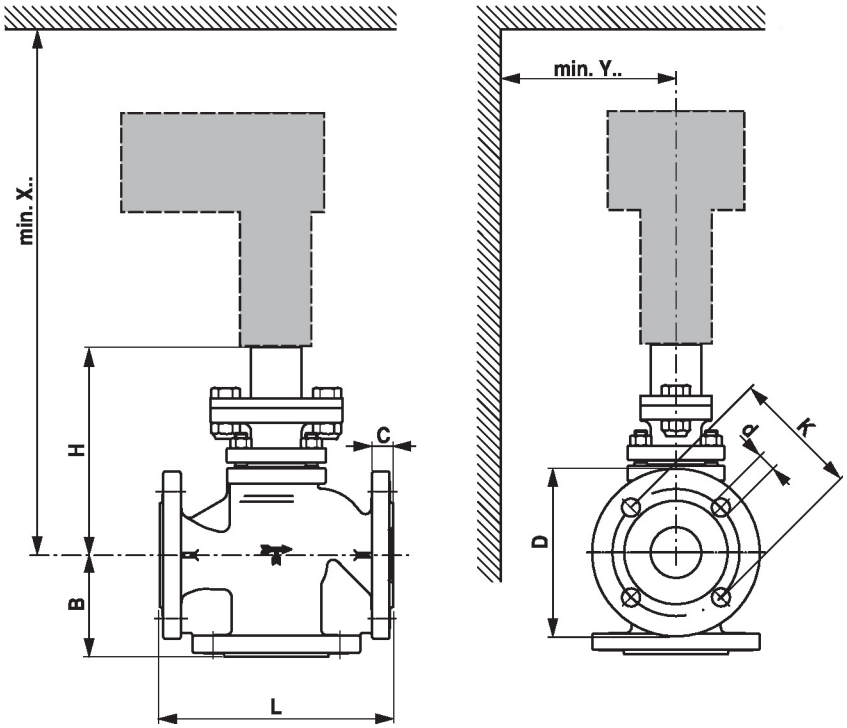

Dimensions

X/Y: Minimum distance with respect to the valve centre.
The actuator dimensions can be found on the respective actuator data sheet.

Type	DN	L [mm]	B [mm]	H [mm]	C [mm]	D [mm]	d [mm]	K [mm]	X [mm]	Y [mm]	kg
H7015X4-S2	15	130	65	172	16	95	4 x 14	65	400	100	6.7
H7020X6P3-S2	20	150	70	172	18	105	4 x 14	75	400	100	7.6
H7025X10-S2	25	160	75	176	18	115	4 x 14	85	410	100	8.8
H7032X16-S2	32	180	80	202	18	140	4 x 18	100	430	100	12
H7040X25-S2	40	200	90	207	18	150	4 x 18	110	440	100	15
H7050X40-S2	50	230	100	205	20	165	4 x 18	125	440	100	18
H7065X63-S4	65	290	120	230	22	185	8 x 18	145	560	150	25
H7080X100-S4	80	310	130	246	24	200	8 x 18	160	580	150	34
H7100X160-S4	100	350	150	265	24	235	8 x 22	190	600	150	52

Further documentation

- The complete product range for water applications
- Data sheets for globe valve actuators
- Installation instructions for valves and/or globe valve actuators
- Notes for project planning 2-way and 3-way globe valves