Characterised control valve, 2-way, Flange, PN 16

- For closed water systems
- For modulating control of air-handling and heating systems on the water side
- Air-bubble tight

Picture may differ from product

Type overview

Type	DN	Kvs [m³/h]	PN	n(gl)	Sv min.
R6065W63-S8	65	63	16	3.2	100
R6080W100-S8	80	100	16	3.2	100
R6100W160-S8	100	160	16	3.2	100
R6125W250-S8	125	250	16	3.2	100
R6150W320-S8	150	320	16	3.2	100

Technical data

Functional data	Fluid	Water, water with glycol up to max. 50% vol.
	Fluid temperature	-10...120°C [14...248°F]
	Close-off pressure Δps	690 kPa
	Differential pressure Δpmax	400 kPa
	Differential pressure note	200 kPa for low-noise operation
	Flow characteristic	equal percentage (VDI/VDE 2173), optimised in the opening range
	Leakage rate	air-bubble tight, leakage rate A (EN 12266-1)
	Angle of rotation	90°
	Angle of rotation note	Operating range 15...90°
	Pipe connection	Flange according to EN 1092-2
	Installation orientation	upright to horizontal (in relation to the spindle)
	Servicing	maintenance-free
Materials	Valve body	EN-GJL-250 (GG 25)
	Body finish	with protective paint
	Closing element	Stainless steel AISI 316
	Spindle	Stainless steel AISI 304
	Spindle seal	EPDM
	Seat	PTFE
	Characterised disc	Stainless steel

Safety notes

- The valve has been designed for use in stationary heating, ventilation and air-conditioning systems and must not be used outside the specified field of application, especially in aircraft or in any other airborne means of transport.
- Only authorised specialists may carry out installation. All applicable legal or institutional installation regulations must be complied with during installation.
- The valve does not contain any parts that can be replaced or repaired by the user.
- The valve may not be disposed of as household refuse. All locally valid regulations and requirements must be observed.
- When determining the flow rate characteristic of controlled devices, the recognised directives must be observed.

Product features

Operating mode

The characterised control valve is adjusted by a rotary actuator. The actuator is controlled by a commercially available modulating or 3-point control system and moves the ball of the valve – the throttling device – to the position dictated by the control signal. Open the characterised control valve counterclockwise and close it clockwise.

Flow characteristic

Equal percentage flow control is ensured by the integrated characterising disc.

Accessories

Electrical accessories

Description	Type
Stem heater flange F05 (30 W)	ZR24-F05

Mechanical accessories

Description	Type
Valve neck extension for ball valve DN 65...150, for butterfly valves up to DN 80	ZR-EXT-F05

Installation notes

Permissible installation orientation

The ball valve can be installed upright to horizontal. The ball valve may not be installed in a hanging position, i.e. with the spindle pointing downwards.

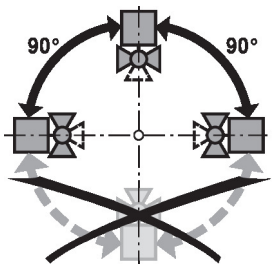

Water quality requirements

The water quality requirements specified in VDI 2035 must be adhered to.

Belimo valves are regulating devices. For the valves to function correctly in the long term, they must be kept free from particle debris (e.g. welding beads during installation work). The installation of a suitable strainer is recommended.

Spindle heater

In cold water applications and warm humid ambient air, condensation can be caused in the actuators. This can lead to corrosion in the gear train of the actuator and a breakdown of the actuator. In such applications, the use of a spindle heater is recommended.

The spindle heater must only be activated when the system is in operation because it does not have a temperature controller.

Installation notes

Servicing

Ball valves and rotary actuators are maintenance-free.

Before any service work on the control element is carried out, it is essential to isolate the rotary actuator from the power supply (by unplugging the electrical cable if necessary). Any pumps in the part of the piping system concerned must also be switched off and the appropriate slide valves closed (allow all components to cool down first if necessary and always reduce the system pressure to ambient pressure level).

The system must not be returned to service until the ball valve and the rotary actuator have been correctly reassembled in accordance with the instructions and the pipeline has been refilled by professionally trained personnel.

Flow direction

The direction of flow, specified by an arrow on the housing, is to be complied with, since otherwise the ball valve could become damaged. Please ensure that the ball is in the correct position (marking on the spindle).

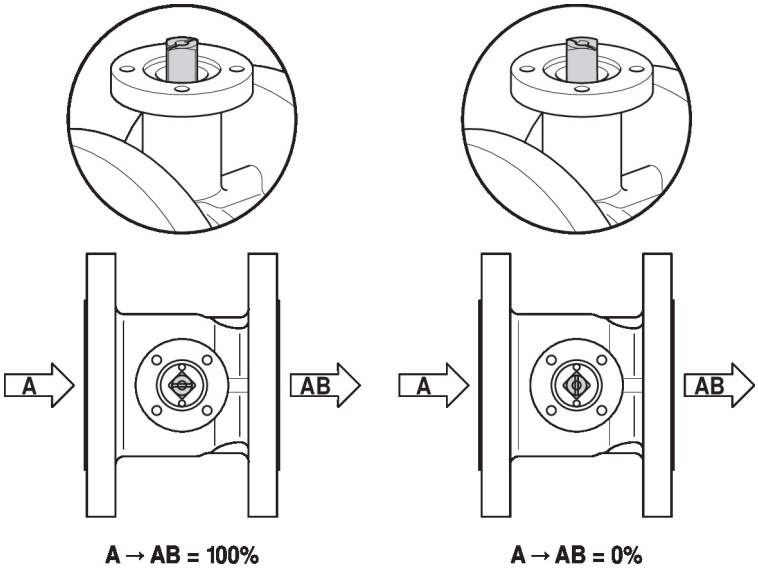

Dimensions

Dimensional drawings

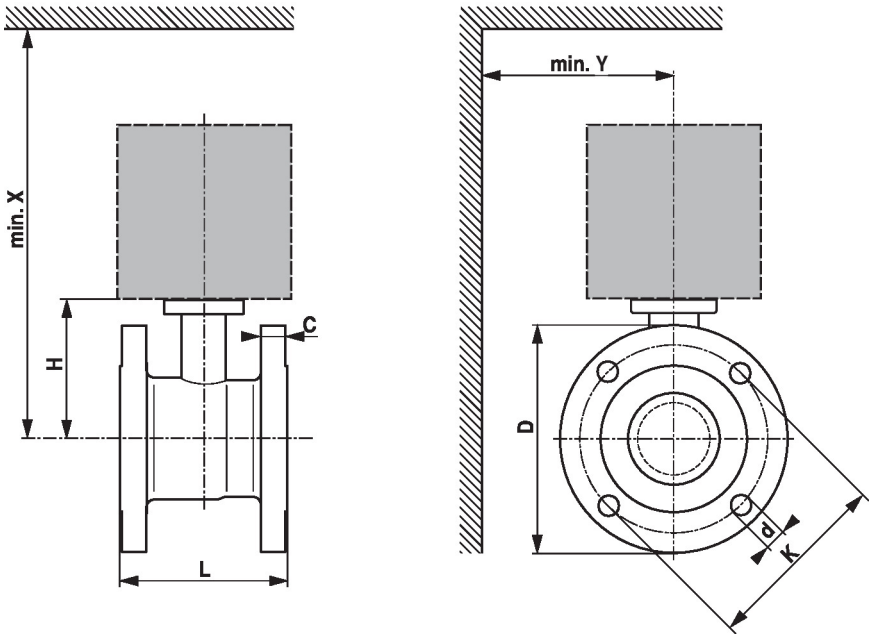

Dimensions

X/Y: Minimum distance with respect to the valve centre.
The actuator dimensions can be found on the respective actuator data sheet.

Type	DN	L [mm]	H [mm]	C [mm]	D [mm]	d [mm]	K [mm]	X [mm]	Y [mm]	kg
R6065W63-S8	65	136.5	113	18.5	185	4 x 19	145	320	150	10
R6080W100-S8	80	168	113	20.5	200	8 x 19	160	320	160	14
R6100W160-S8	100	211	124	22	224	8 x 19	180	330	175	23
R6125W250-S8	125	262.5	143	22	252	8 x 19	210	350	190	31
R6150W320-S8	150	315	143	22	282	8 x 23	240	350	200	40

Further documentation

- The complete product range for water applications
- Data sheets for actuators
- Installation instructions for actuators and/or ball valves
- General notes for project planning