Cable temperature sensor

Active sensor (0...10 V) for measuring the temperature in pipe and air applications. Incorporates a stainless steel probe and plenum-rated cable. IP65 / NEMA 4X rated housing.

5 YEAR WARRANTY

## Type Overview

| Type | Output signal active temperature | Cable length | Probe length | Probe diameter |
|---|---|---|---|---|
| 22CT-12H | 0...5 V, 0...10 V | 2 m | 50 mm | 6 mm |

## Technical data

| | | |
|---|---|---|
| **Electrical data** | Nominal voltage | AC/DC 24 V |
| | Nominal voltage range | AC 21.6...26.4 V / DC 13.5...26.4 V |
| | Power consumption AC | 0.8 VA |
| | Power consumption DC | 0.4 W |
| | Electrical connection | Pluggable spring loaded terminal block max. 2.5 mm² |
| | Cable entry | Cable gland with strain relief ø6...8 mm |
| **Functional data** | Medium | Air<br>Water |
| | Multirange | 8 measuring ranges selectable |
| | Voltage output | 1 x 0...5 V, 0...10 V, min. resistance 5 kΩ |
| | Output signal active note | Output 0...5/10 V with Jumper adjustable |
| **Measuring data** | Measured values | Temperature |
| **Specification temperature active** | Sensing element technology | Based on Pt1000 class AA |
| | Measuring range temperature settings | Active sensor: range selectable<br>Attention: The maximum measuring range listed does not indicate the allowable fluid temperature for the sensor. Refer to safety data for the maximum fluid temperature limits. |

| Setting | Range [°C] | Range [°F] | Factory setting |
|---|---|---|---|
| S0 | -50...50 | -30...130 | |
| S1 | -10...120 | 0...250 | |
| S2 | 0...50 | 40...140 | |
| S3 | 0...250 | 30...480 | |
| S4 | -15...35 | 0...100 | |
| S5 | 0...100 | 40...240 | |
| S6 | -20...80 | 40...90 | |
| S7 | 0...160 | 0...150 | ✓ |

| | | |
|---|---|---|
| | Accuracy temperature | ±0.5°C @ 21°C [±0.9°F @ 70°F] @ measuring range setting S2 and S4 |
| | Long term stability | ±0.04°C p.a. @ 21°C [±0.07°F p.a. @ 70°F] |

## Technical data

| | | |
|---|---|---|
| **Specification temperature active** | Time constant τ (63%) in water pipe | With thermowell A-22P-A.. and thermal contact fluid<br>Typical 7 s with thermowell brass<br>Typical 9 s with thermowell stainless steel |
| | Time constant τ (63%) in the air duct | Typical 155 s @ 0 m/s<br>Typical 35 s @ 3 m/s |
| **Safety data** | Protection class IEC/EN | III, Protective Extra-Low Voltage (PELV) |
| | Power source UL | Class 2 Supply |
| | Degree of protection IEC/EN | IP65 |
| | Degree of protection NEMA/UL | NEMA 4X |
| | Housing | UL Enclosure Type 4X |
| | EU Conformity | CE Marking |
| | Certification IEC/EN | IEC/EN 60730-1 |
| | Quality Standard | ISO 9001 |
| | Type of action | Type 1 |
| | Rated impulse voltage supply | 0.8 kV |
| | Pollution degree | 3 |
| | Ambient humidity | Max. 95% RH, non-condensing |
| | Ambient temperature | -35...50°C [-30...120°F] |
| | Fluid temperature | -50...180°C [-60...355°F] |
| | Housing surface temperature | Max. 70°C [160°F] |
| **Materials** | Housing | Cover: PC, orange<br>Bottom: PC, orange<br>Seal: NBR70, black<br>UV resistant |
| | Cable gland | PA6, black |
| | Mounting plate | PC, grey RAL 7001 |

## Safety notes

This device has been designed for use in stationary heating, ventilation and air-conditioning systems and must not be used outside the specified field of application. Unauthorised modifications are prohibited. The product must not be used in relation with any equipment that in case of a failure may threaten humans, animals or assets.

Ensure all power is disconnected before installing. Do not connect to live/operating equipment.

Only authorised specialists may carry out installation. All applicable legal or institutional installation regulations must be complied with during installation.

The device contains electrical and electronic components and must not be disposed of as household refuse. All locally valid regulations and requirements must be observed.

## Remarks

**General remarks concerning sensors**

When using lengthy connection wires (depending on the cross section used) the measuring result might be falsified due to a voltage drop at the common GND-wire (caused by the voltage current and the line resistance). In this case, 2 GND-wires must be wired to the sensor - one for supply voltage and one for the measuring current.

Sensing devices with a transducer should always be operated in the middle of the measuring range to avoid deviations at the measuring end points. The ambient temperature of transducer electronics should be kept constant. The transducers must be operated at a constant supply voltage (±0.2 V). When switching the supply voltage on/off, onsite power surges must be avoided.

## Remarks

**Remark: Occurring draft leads to a better carrying-off of dissipative power at the sensor. Thus temporally limited fluctuations might occur upon temperature measurement.**

**Build-up of self-heating by electrical dissipative power**

Temperature sensors with electronic components always have a dissipative power which affects the temperature measurement of the ambient air. The dissipation in active temperature sensors shows a linear increase with rising operating voltage. The dissipative power should be taken into account when measuring temperature.

In case of a fixed operating voltage (±0.2 V), this is normally done by adding or reducing a constant offset value. As Belimo transducers work with a variable operating voltage, for reasons of production engineering only one operating voltage can be taken into consideration. Transducers 0...10 V / 4...20 mA have a standard setting at an operating voltage of DC 24 V. This means that at this voltage, the expected measuring error of the output signal will be the least. For other operating voltages, the offset error will be increased by a changing power loss of the sensor electronics.

If a readjustment directly at the active sensor should be necessary during later operation, this can be done with the following adjustment methods.

- For sensors with NFC or dongle with the corresponding Belimo app
- For sensors with a trimming potentiometer on the sensor board
- For bus sensors via bus interface with a corresponding software variable

## Parts included

| Description | Type |
|---|---|
| Mounting plate S housing | A-22D-A09 |
| Dowels | |
| Screws | |

## Accessories

**Optional accessories**

| Description | Type |
|---|---|
| Connection adapter flex conduit, M20x1.5, for cable gland 1x 6 mm, Multipack 10 pcs. | A-22G-A01.1 |

**Optional accessories air**

| Description | Type |
|---|---|
| Mounting flange for sensor probe 6 mm, up to max. 120°C [248°F], Plastic | A-22D-A03 |
| Mounting flange for sensor probe 6 mm, up to max. 260°C, Brass | A-22D-A05 |

**Recommended accessories water**

| Description | Type |
|---|---|
| Thermowell Stainless steel, 50 mm, G 1/2", SW27 | A-22P-A06 |
| Thermowell Stainless steel, 100 mm, G 1/2", SW27 | A-22P-A08 |
| Thermowell Stainless steel, 150 mm, G 1/2", SW27 | A-22P-A10 |
| Thermowell Stainless steel, 200 mm, G 1/2", SW27 | A-22P-A12 |
| Thermowell Stainless steel, 250 mm, G 1/2", SW27 | A-22P-A29 |
| Thermowell Stainless steel, 300 mm, G 1/2", SW27 | A-22P-A14 |
| Thermowell Stainless steel, 450 mm, G 1/2", SW27 | A-22P-A16 |
| Thermowell Brass, 50 mm, R 1/2", SW22 | A-22P-A18 |
| Thermowell Brass, 100 mm, R 1/2", SW22 | A-22P-A20 |
| Thermowell Brass, 150 mm, R 1/2", SW22 | A-22P-A22 |
| Thermowell Brass, 200 mm, R 1/2", SW22 | A-22P-A24 |
| Thermowell Brass, 250 mm, R 1/2", SW22 | A-22P-A30 |
| Thermowell Brass, 300 mm, R 1/2", SW22 | A-22P-A26 |
| Thermowell Brass, 450 mm, R 1/2", SW22 | A-22P-A28 |
| Thermal contact fluid | A-22P-A44 |
| Compression fitting, Stainless steel, G 1/4" (external thread) for 6 mm, with cutting ring | A-22P-A45 |
| Cold barrier, Plastic, L 50 mm, for thermowell A-22P-A.. | A-22P-A51 |

## Wiring diagram

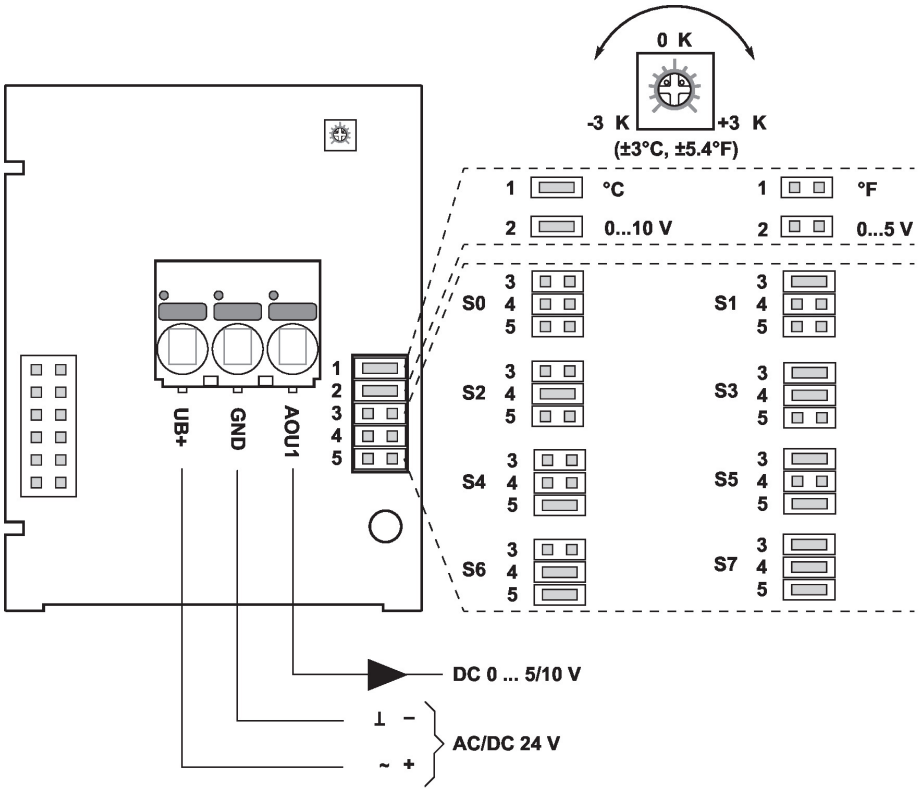


The following measuring ranges can be adjusted through the jumper settings:

| Setting | Range [°C] | Range [°F] | Factory setting |
|---|---|---|---|
| S0 | -50...50 | -30...130 | |
| S1 | -10...120 | 0...250 | |
| S2 | 0...50 | 40...140 | |
| S3 | 0...250 | 30...480 | |
| S4 | -15...35 | 0...100 | |
| S5 | 0...100 | 40...240 | |
| S6 | -20...80 | 40...90 | |
| S7 | 0...160 | 0...150 | ✓ |

## Dimensions

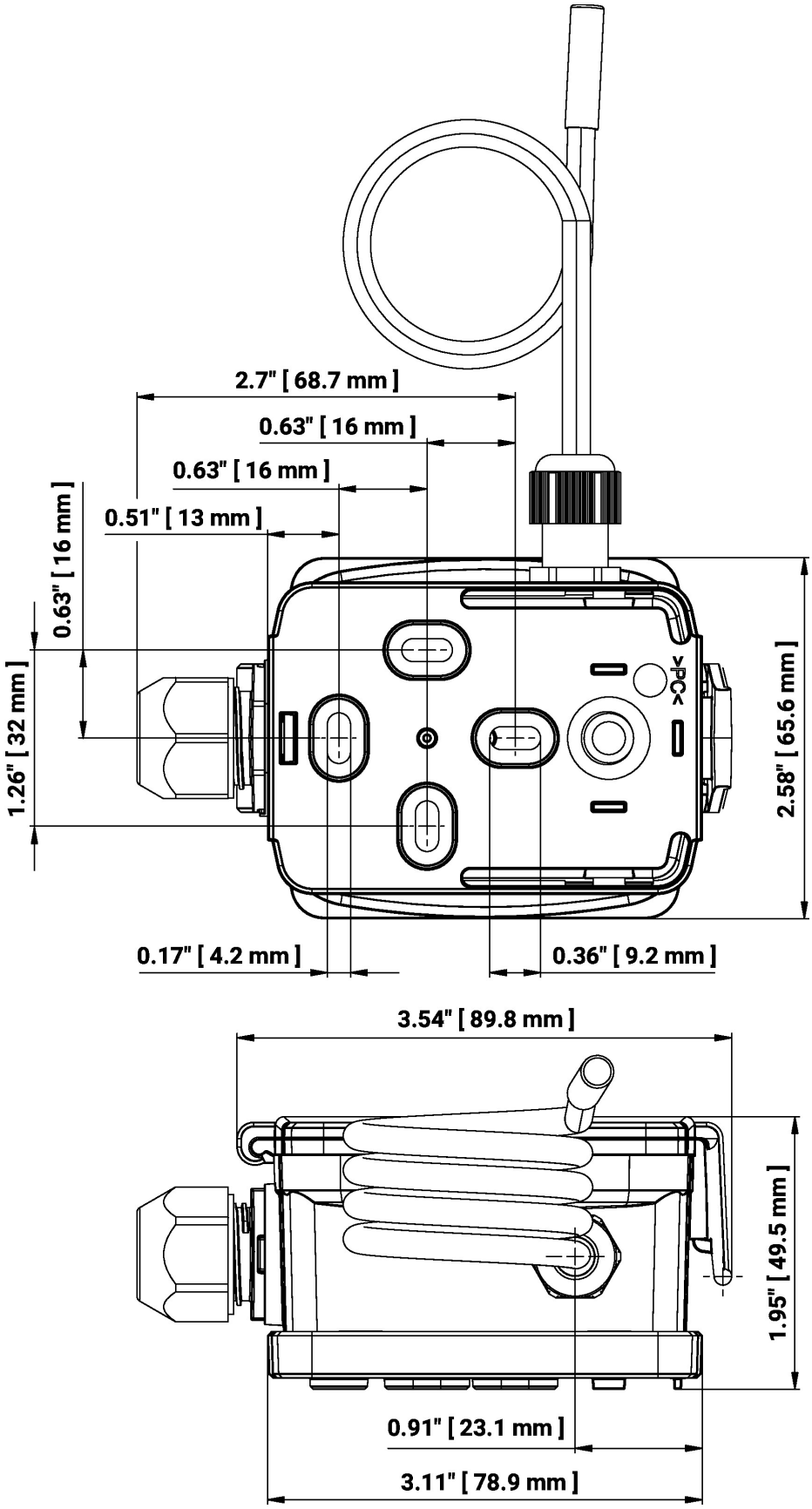
2.7" [ 68.7 mm ]
0.63" [ 16 mm ]
0.63" [ 16 mm ]
0.51" [ 13 mm ]
0.63" [ 16 mm ]
1.26" [ 32 mm ]
2.58" [ 65.6 mm ]
0.17" [ 4.2 mm ]
0.36" [ 9.2 mm ]
3.54" [ 89.8 mm ]
1.95" [ 49.5 mm ]
0.91" [ 23.1 mm ]
3.11" [ 78.9 mm ]

## Dimensions

| Type | Probe length | Weight |
|---|---|---|
| 22CT-12H | 50 mm | 0.19 kg |

## Further documentation

- Installation instructions