Globe valve, 2-way, Flange, PN 6

- For closed water systems
- For modulating control of air-handling and heating systems on the water side

Picture may differ from product

## Type overview

| Type | DN | Kvs [m³/h] | Stroke | PN | n(gl) | Sv min. |
|---|---|---|---|---|---|---|
| H611R | 15 | 0.63 | 15 mm | 6 | 3 | 50 |
| H612R | 15 | 1 | 15 mm | 6 | 3 | 50 |
| H613R | 15 | 1.6 | 15 mm | 6 | 3 | 50 |
| H614R | 15 | 2.5 | 15 mm | 6 | 3 | 50 |
| H615R | 15 | 4 | 15 mm | 6 | 3 | 50 |
| H620R | 20 | 6.3 | 15 mm | 6 | 3 | 100 |
| H625R | 25 | 10 | 15 mm | 6 | 3 | 100 |
| H632R | 32 | 16 | 15 mm | 6 | 3 | 100 |
| H640R | 40 | 25 | 15 mm | 6 | 3 | 100 |
| H650R | 50 | 40 | 15 mm | 6 | 3 | 100 |
| H664R | 65 | 58 | 18 mm | 6 | 3 | 100 |
| H679R | 80 | 90 | 18 mm | 6 | 3 | 100 |
| H6100R | 100 | 145 | 30 mm | 6 | 3 | 100 |

## Technical data

| | | |
|---|---|---|
| **Functional data** | Fluid | Water, water with glycol up to max. 50% vol. |
| | Fluid temperature | -10...120°C [14...248°F] |
| | Fluid temperature note | At a fluid temperature of -10...2°C, a spindle heating is needed. |
| | Flow characteristic | equal percentage (VDI/VDE 2173), optimised in the opening range |
| | Leakage rate | max. 0.05% of the Kvs value |
| | Closing point | Top (▲) |
| | Pipe connection | Flange<br>according to ISO 7005-2 |
| | Installation orientation | upright to horizontal (in relation to the spindle) |
| | Servicing | maintenance-free |
| **Materials** | Valve body | EN-GJL-250 (GG 25) |
| | Body finish | with protective paint |
| | Closing element | Stainless steel |
| | Spindle | Stainless steel |
| | Spindle seal | EPDM O-ring |
| | Seat | GG25 / Niro (Bypass) |

## Safety notes

- The valve has been designed for use in stationary heating, ventilation and air-conditioning systems and must not be used outside the specified field of application, especially in aircraft or in any other airborne means of transport.
- Only authorised specialists may carry out installation. All applicable legal or institutional installation regulations must be complied with during installation.
- The valve does not contain any parts that can be replaced or repaired by the user.
- The valve may not be disposed of as household refuse. All locally valid regulations and requirements must be observed.
- When determining the flow rate characteristic of controlled devices, the recognised directives must be observed.

## Product features

**Operating mode**

The globe valve is adjusted by a globe valve actuator. The actuators are connected by a commercially available modulating or 3-point control system and move the valve cone, which acts as a throttling device, into the opening position dictated by the control signal.

**Flow characteristic**

An equal percentage flow characteristic is produced by the profile of the valve cone.

**Fluid velocity**

Standard values for low-noise operation in HVAC systems are fluid velocities of 1...2 m/s. At fluid velocities above 2 m/s, further flow effects like noise as well as cavitation can occur. This can reduce the service life of a valve depending on the situation.

## Accessories

**Electrical accessories**

| Description | Type |
|---|---|
| Stem heater for LV.., NV.., SV.. actuator | ZH24-1-A |
| Stem heater for valves DN 65...250, AC/DC 24 V, 60 W | ZH24-1-B |

## Installation notes

**Permissible installation orientation**

The globe valve may be mounted upright to horizontal. It is not permissible to mount the globe valves with the stem pointing downwards.

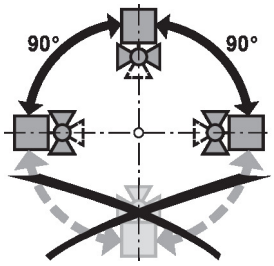


**Water quality requirements**

The water quality requirements specified in VDI 2035 must be adhered to.

Belimo valves are regulating devices. For the valves to function correctly in the long term, they must be kept free from particle debris (e.g. welding beads during installation work). The installation of a suitable strainer is recommended.

**Servicing**

Globe valves and globe valve actuators are maintenance-free.

Before any service work on the control element is carried out, it is essential to isolate the globe valve actuator from the power supply (by unplugging the electrical cables if necessary). Any pumps in the part of the piping system concerned must also be switched off and the appropriate slide valves closed (allow all components to cool down first if necessary and always reduce the system pressure to ambient pressure level).

The system must not be returned to service until the globe valve and the globe valve actuator have been reassembled correctly in accordance with the instructions and the pipeline has been refilled by professionally trained personnel.

## Installation notes

**Flow direction**

The direction of flow, specified by an arrow on the housing, is to be complied with, since otherwise the valve could become damaged.

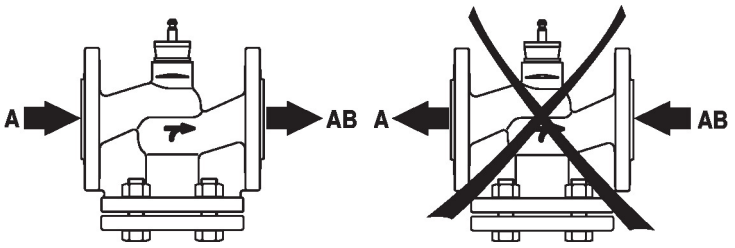


## Differential and close-off pressure

The maximum differential and close-off pressure of globe valves depends on the mounted globe valve actuator. To ensure optimum operation and maximum service life, the maximum differential and close-off pressure in the table below must not be exceeded.

| ps <600 kPa (PN6) t= 5... 120°C | | LV..A.. 500N | | NV..A.. 1000N | | SV..A.. 1500N | | AVK..A.. 2000N | | EV..A.. 2500N | | RV..A.. 4500N | |
|---|---|---|---|---|---|---|---|---|---|---|---|---|---|
| A AB | DN | Δps [kPa] | Δpmax [kPa] | Δps [kPa] | Δpmax [kPa] | Δps [kPa] | Δpmax [kPa] | Δps [kPa] | Δpmax [kPa] | Δps [kPa] | Δpmax [kPa] | Δps [kPa] | Δpmax [kPa] |
| H611R ... 15R | 15 | 600 | 400 | 600 | 400 | 600 | 400 | | | | | | |
| H620R | 20 | 600 | 400 | 600 | 400 | 600 | 400 | | | | | | |
| H625R | 25 | 500 | 400 | 600 | 400 | 600 | 400 | | | | | | |
| H632R | 32 | 350 | 350 | 600 | 400 | 600 | 400 | | | | | | |
| H640R | 40 | 150 | 150 | 500 | 400 | 600 | 400 | | | | | | |
| H650R | 50 | 70 | 70 | 300 | 300 | 550 | 400 | | | | | | |
| H664R | 65 | | | 140 | 140 | 280 | 280 | | | | | | |
| H679R | 80 | | | 80 | 80 | 160 | 160 | | | | | | |
| H6100R | 100 | | | | | | | 150 | 150 | 200 | 200 | 450 | 400 |

## Dimensions

**Dimensional drawings**

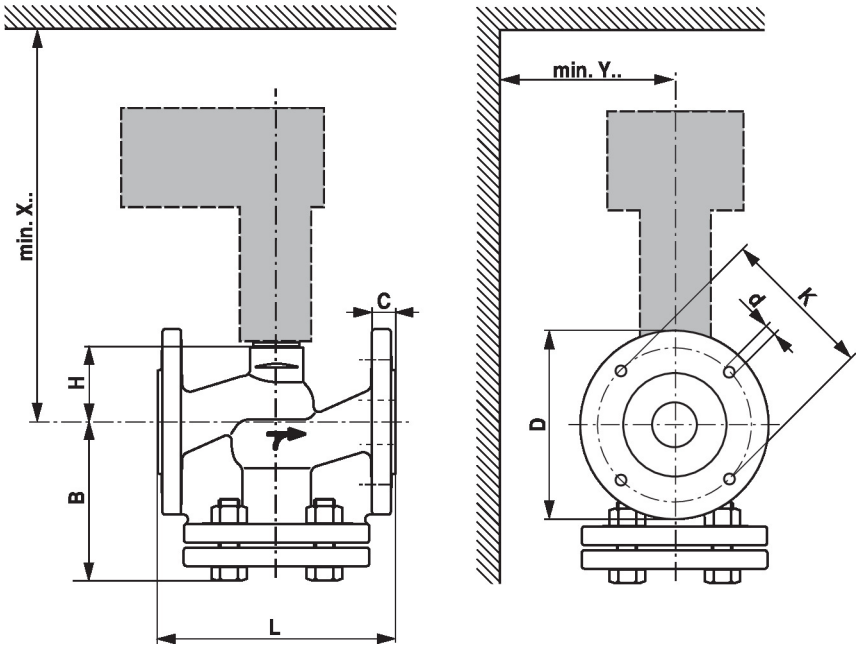


X/Y: Minimum distance with respect to the valve centre.
The actuator dimensions can be found on the respective actuator data sheet.

## Dimensions

| Type | DN | L [mm] | B [mm] | H [mm] | C [mm] | D [mm] | d [mm] | K [mm] | X [mm] | Y [mm] | kg |
|---|---|---|---|---|---|---|---|---|---|---|---|
| **H611R** | 15 | 130 | 86 | 46 | 12 | 80 | 4 x 11 | 55 | 290 | 100 | 3.2 |
| **H612R** | 15 | 130 | 86 | 46 | 12 | 80 | 4 x 11 | 55 | 290 | 100 | 3.2 |
| **H613R** | 15 | 130 | 86 | 46 | 12 | 80 | 4 x 11 | 55 | 290 | 100 | 3.2 |
| **H614R** | 15 | 130 | 86 | 46 | 12 | 80 | 4 x 11 | 55 | 290 | 100 | 3.2 |
| **H615R** | 15 | 130 | 86 | 46 | 12 | 80 | 4 x 11 | 55 | 290 | 100 | 3.2 |
| **H620R** | 20 | 150 | 93 | 46 | 14 | 90 | 4 x 11 | 65 | 290 | 100 | 4.5 |
| **H625R** | 25 | 160 | 98 | 52 | 14 | 100 | 4 x 11 | 75 | 300 | 100 | 5.1 |
| **H632R** | 32 | 180 | 119 | 56 | 16 | 120 | 4 x 14 | 90 | 300 | 100 | 7.0 |
| **H640R** | 40 | 200 | 124 | 64 | 16 | 130 | 4 x 14 | 100 | 310 | 100 | 9.3 |
| **H650R** | 50 | 230 | 124 | 64 | 16 | 140 | 4 x 14 | 110 | 310 | 100 | 11 |
| **H664R** | 65 | 290 | 144 | 100 | 16 | 160 | 4 x 14 | 130 | 350 | 100 | 18 |
| **H679R** | 80 | 310 | 158 | 110 | 18 | 190 | 4 x 18 | 150 | 360 | 100 | 24 |
| **H6100R** | 100 | 350 | 178 | 125 | 18 | 210 | 4 x 18 | 170 | 475 | 120 | 31 |

## Further documentation

- The complete product range for water applications
- Data sheets for globe valve actuators
- Installation instructions for valves and/or globe valve actuators
- Notes for project planning 2-way and 3-way globe valves