Globe valve, 3-way, Flange, PN 6

- For closed water systems
- For modulating control of air-handling and heating systems on the water side

Picture may differ from product

Type overview

Type	DN	Kvs [m³/h]	Stroke	PN	n(gl)	Sv min.
H711R	15	0.63	15 mm	6	3	50
H712R	15	1	15 mm	6	3	50
H713R	15	1.6	15 mm	6	3	50
H714R	15	2.5	15 mm	6	3	50
H715R	15	4	15 mm	6	3	50
H720R	20	6.3	15 mm	6	3	100
H725R	25	10	15 mm	6	3	100
H732R	32	16	15 mm	6	3	100
H740R	40	25	15 mm	6	3	100
H750R	50	40	15 mm	6	3	100
H764R	65	58	18 mm	6	3	100
H779R	80	90	18 mm	6	3	100
H7100R	100	145	30 mm	6	3	100

Technical data

Functional data	Fluid	Water, water with glycol up to max. 50% vol.
	Fluid temperature	-10...120°C [14...248°F]
	Fluid temperature note	At a fluid temperature of -10...2°C, a spindle heating is needed.
	Flow characteristic	Control path A – AB: equal percentage (VDI/VDE 2173), optimised in the opening range, Bypass B – AB: linear (VDI/VDE 2173)
	Leakage rate	Control path A – AB: max. 0.05% of the Kvs value; Bypass B – AB: max. 1% of the Kvs value
	Closing point	Top (▲)
	Pipe connection	Flange according to ISO 7005-2
	Installation orientation	upright to horizontal (in relation to the spindle)
	Servicing	maintenance-free
Materials	Valve body	EN-GJL-250 (GG 25)
	Body finish	with protective paint
	Closing element	Stainless steel
	Spindle	Stainless steel
	Spindle seal	EPDM O-ring
	Seat	GG25 / Niro (Bypass)

Safety notes

- The valve has been designed for use in stationary heating, ventilation and air-conditioning systems and must not be used outside the specified field of application, especially in aircraft or in any other airborne means of transport.
- Only authorised specialists may carry out installation. All applicable legal or institutional installation regulations must be complied with during installation.
- The valve does not contain any parts that can be replaced or repaired by the user.
- The valve may not be disposed of as household refuse. All locally valid regulations and requirements must be observed.
- When determining the flow rate characteristic of controlled devices, the recognised directives must be observed.

Product features

Operating mode

The globe valve is adjusted by a globe valve actuator. The actuators are controlled by a commercially available modulating or 3-point control system and move the valve cone, which acts as a mixing device, to the opening position dictated by the control signal.

Flow characteristic

An equal percentage flow characteristic in the flow direction is produced by the profile of the valve cone. The bypass exhibits a linear characteristic curve.

Fluid velocity

Standard values for low-noise operation in HVAC systems are fluid velocities of 1...2 m/s. At fluid velocities above 2 m/s, further flow effects like noise as well as cavitation can occur. This can reduce the service life of a valve depending on the situation.

Accessories

Electrical accessories

Description	Type
Stem heater for LV.., NV.., SV.. actuator	ZH24-1-A
Stem heater for valves DN 65...250, AC/DC 24 V, 60 W	ZH24-1-B

Installation notes

Permissible installation orientation

The globe valve may be mounted upright to horizontal. It is not permissible to mount the globe valves with the stem pointing downwards.

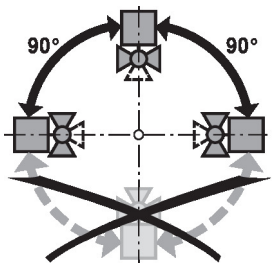

Water quality requirements

The water quality requirements specified in VDI 2035 must be adhered to.

Belimo valves are regulating devices. For the valves to function correctly in the long term, they must be kept free from particle debris (e.g. welding beads during installation work). The installation of a suitable strainer is recommended.

Installation notes

Servicing

Globe valves and globe valve actuators are maintenance-free.

Before any service work on the control element is carried out, it is essential to isolate the globe valve actuator from the power supply (by unplugging the electrical cables if necessary). Any pumps in the part of the piping system concerned must also be switched off and the appropriate slide valves closed (allow all components to cool down first if necessary and always reduce the system pressure to ambient pressure level).

The system must not be returned to service until the globe valve and the globe valve actuator have been reassembled correctly in accordance with the instructions and the pipeline has been refilled by professionally trained personnel.

Flow direction

The direction of flow, specified by an arrow on the housing, is to be complied with, since otherwise the valve could become damaged.

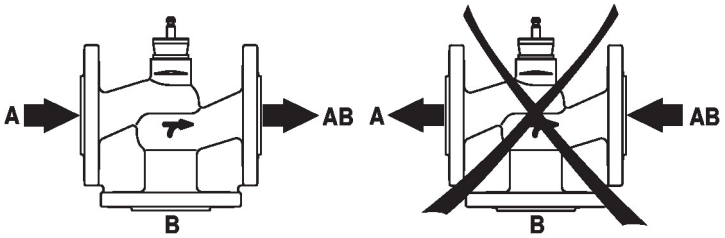

Differential and close-off pressure

The maximum differential and close-off pressure of globe valves depends on the mounted globe valve actuator. To ensure optimum operation and maximum service life, the maximum differential and close-off pressure in the table below must not be exceeded.

ps <600 kPa (PN6) t= 5... 120°C		LV..A.. 500N		NV..A.. 1000N		SV..A.. 1500N		AVK..A.. 2000N		EV..A.. 2500N		RV..A.. 4500N	
	DN	Δps [kPa]	Δpmax [kPa]	Δps [kPa]	Δpmax [kPa]	Δps [kPa]	Δpmax [kPa]	Δps [kPa]	Δpmax [kPa]	Δps [kPa]	Δpmax [kPa]	Δps [kPa]	Δpmax [kPa]
H711R ... 15R	15	600	400	600	400	600	400						
H720R	20	600	400	600	400	600	400						
H725R	25	500	400	600	400	600	400						
H732R	32	350	350	600	400	600	400						
H740R	40	150	150	500	400	600	400						
H750R	50	70	70	300	300	550	400						
H764R	65			140	140	280	280						
H779R	80			80	80	160	160						
H7100R	100							150	150	200	200	450	400

Dimensions

Dimensional drawings

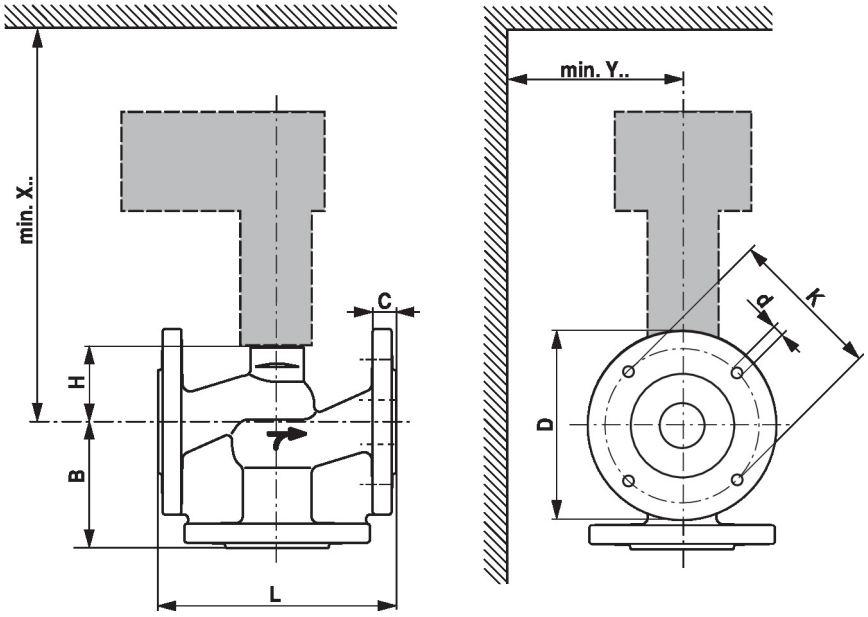

X/Y: Minimum distance with respect to the valve centre.
The actuator dimensions can be found on the respective actuator data sheet.

Type	DN	L [mm]	B [mm]	H [mm]	C [mm]	D [mm]	d [mm]	K [mm]	X [mm]	Y [mm]	kg
H711R	15	130	65	46	12	80	4 x 11	55	290	100	2.6
H712R	15	130	65	46	12	80	4 x 11	55	290	100	2.6
H713R	15	130	65	46	12	80	4 x 11	55	290	100	2.6
H714R	15	130	65	46	12	80	4 x 11	55	290	100	2.6
H715R	15	130	65	46	12	80	4 x 11	55	290	100	3.3
H720R	20	150	70	46	14	90	4 x 11	65	290	100	3.9
H725R	25	160	75	52	14	100	4 x 11	75	300	100	4.8
H732R	32	180	95	56	16	120	4 x 14	90	300	100	6.3
H740R	40	200	100	64	16	130	4 x 14	100	310	100	8.2
H750R	50	230	100	64	16	140	4 x 14	110	310	100	9.3
H764R	65	290	120	100	16	160	4 x 14	130	350	100	15
H779R	80	310	130	110	18	190	4 x 18	150	360	100	21
H7100R	100	350	150	125	18	210	4 x 18	170	475	120	27

Further documentation

- The complete product range for water applications
- Data sheets for globe valve actuators
- Installation instructions for valves and/or globe valve actuators
- Notes for project planning 2-way and 3-way globe valves