MP BUS

Communicative rotary actuator fail-safe for adjusting dampers in technical building installations

- Air damper size up to approx. 2 m²
- Torque motor 10 Nm
- Nominal voltage AC/DC 24 V
- Control modulating, communicative 2...10 V variable
- Position feedback 2...10 V variable
- Communication via Belimo MP-Bus
- Conversion of sensor signals
- Optimum weather protection for use outdoors (for use in ambient temperatures up to –40°C, there is a separate actuator available with built-in heater)

Picture may differ from product

Technical data

Electrical data	Nominal voltage	AC/DC 24 V
	Nominal voltage frequency	50/60 Hz
	Nominal voltage range	AC 19.2...28.8 V / DC 21.6...28.8 V
	Power consumption in operation	5.5 W
	Power consumption in rest position	3.5 W
	Power consumption for wire sizing	8 VA
	Connection supply / control	Cable 1 m, 4x 0.75 mm², halogen-free
	Parallel operation	Yes (note the performance data)
Data bus communication	Communicative control	MP-Bus
	Number of nodes	MP-Bus max. 8
Functional data	Torque motor	10 Nm
	Torque fail-safe	10 Nm
	Operating range Y	2...10 V
	Input impedance	100 kΩ
	Operating range Y variable	Start point 0.5...30 V End point 2.5...32 V
	Operating modes optional	Open/close 3-point (AC only) Modulating (DC 0...32 V)
	Position feedback U	2...10 V
	Position feedback U note	Max. 0.5 mA
	Position feedback U variable	Start point 0.5...8 V End point 2.5...10 V
	Position accuracy	±5%
	Direction of motion motor	selectable with switch L/R
	Direction of motion variable	electronically reversible
	Direction of motion fail-safe	L (ccw)
	Direction of motion note	Y = 0 V: At switch position 0 (ccw rotation) / 1 (cw rotation)
	Manual override	by means of hand crank and locking switch
	Angle of rotation	Max. 95°
	Angle of rotation note	adjustable starting at 33% in 2.5% steps (with mechanical end stop)
	Running time motor	150 s / 90°
	Running time motor variable	40...150 s
	Running time fail-safe	<20 s @ -20...50°C, <60 s @ -30°C
	Sound power level, motor	40 dB(A)
	Adaptation setting range	manual

Technical data

Functional data	Adaptation setting range variable	No action Adaptation when switched on Adaptation after using the hand crank
	Override control	MAX (maximum position) = 100% MIN (minimum position) = 0% ZS (intermediate position, AC only) = 50%
	Override control variable	MAX = (MIN + 32%)...100% MIN = 0%...(MAX – 32%) ZS = MIN...MAX
	Mechanical interface	Universal shaft clamp 12...26.7 mm
	Position indication	Mechanical, pluggable
	Service life	Min. 60'000 fail-safe positions
Safety data	Protection class IEC/EN	III, Safety Extra-Low Voltage (SELV)
	Power source UL	Class 2 Supply
	Degree of protection IEC/EN	IP66/67
	Degree of protection NEMA/UL	NEMA 4X
	Housing	UL Enclosure Type 4X
	EMC	CE according to 2014/30/EU
	Certification IEC/EN	IEC/EN 60730-1 and IEC/EN 60730-2-14
	UL Approval	cULus according to UL60730-1A, UL60730-2-14 and CAN/CSA E60730-1 The UL marking on the actuator depends on the production site, the device is UL-compliant in any case
	Type of action	Type 1.AA
	Rated impulse voltage supply / control	0.8 kV
	Pollution degree	4
	Ambient humidity	Max. 100% RH
	Ambient temperature	-30...50°C [-22...122°F]
	Ambient temperature note	-40...50°C [-40...122°F] for actuator with integrated heating
	Storage temperature	-40...80°C [-40...176°F]
	Servicing	maintenance-free
Weight	Weight	4.3 kg

Safety notes

- This device has been designed for use in stationary heating, ventilation and air-conditioning systems and must not be used outside the specified field of application, especially in aircraft or in any other airborne means of transport.
- Only authorised specialists may carry out installation. All applicable legal or institutional installation regulations must be complied with during installation.
- Junction boxes must at least correspond with housing IP degree of protection!
- The cover of the protective housing may be opened for adjustment and servicing. When it is closed afterwards, the housing must seal tight (see installation instructions).
- The device may only be opened at the manufacturer's site. It does not contain any parts that can be replaced or repaired by the user.
- The cables must not be removed from the device installed in the interior.
- To calculate the torque required, the specifications supplied by the damper manufacturers concerning the cross-section and the design, as well as the installation situation and the ventilation conditions must be observed.
- The device contains electrical and electronic components and must not be disposed of as household refuse. All locally valid regulations and requirements must be observed.
- The device is not designed for applications where chemical influences (gases, fluids) are present or for utilisation in corrosive environments in general.
- The actuator may not be used in plenary applications (e.g. suspended ceilings or raised floors).
- The materials used may be subject to external influences (temperature, pressure, construction fastening, effect of chemical substances, etc.), which cannot be simulated in laboratory tests or field trials. In case of doubt, we definitely recommend that you carry out a test. This information does not imply any legal entitlement. Belimo will not be held liable and will provide no warranty.
- Flexible metallic cable conduits or threaded cable conduits of equal value are to be used for UL (NEMA) Type 4X applications.
- When used under high UV loads, e.g. extreme sunlight, the use of flexible metallic or equivalent cable conduits is recommended.

Product features

Fields of application

The actuator is particularly suitable for utilisation in outdoor applications and is protected against the following weather conditions:
- UV radiation
- Rain / Snow
- Dirt / Dust
- Air humidity
- Alternating climate / frequent and severe temperature fluctuations (Recommendation: use the actuator with integrated factory-installed heating which can be ordered separately to prevent internal condensation)

Operating mode

Conventional operation:

The actuator is connected with an analogue control signal Y (note the operating range) and drives the damper to the operating position at the same time as tensioning the return spring. The damper is turned back to the fail-safe position by spring force when the supply voltage is interrupted.

Operation on Bus:

The actuator receives its digital control signal from the higher level controller via the MP-Bus and drives to the position defined. Connection U serves as communication interface and does not supply an analogue measuring voltage.

Converter for sensors

Connection option for a sensor (passive or active sensor or switching contact). The MP actuator serves as an analogue/digital converter for the transmission of the sensor signal via MP-Bus to the higher level system.

Configurable device

The factory settings cover the most common applications. Single parameters can be modified with Belimo Assistant 2.

Simple direct mounting

Simple direct mounting on the damper shaft with a universal shaft clamp, supplied with an anti-rotation mechanism to prevent the actuator from rotating.

Product features

Manual override

By using the hand crank the damper can be actuated manually and engaged with the locking switch at any position. Unlocking is carried out manually or automatically by applying the operating voltage.

The housing cover must be removed for manual override.

Adjustable angle of rotation

Adjustable angle of rotation with mechanical end stops.

High functional reliability

The actuator is overload protected, requires no limit switches and automatically stops when the end stop is reached.

Home position

The first time the supply voltage is switched on, i.e. at the time of commissioning, the actuator carries out a synchronisation. The synchronisation is in the home position (0%).

The actuator then moves into the position defined by the control signal.

Adaptation and synchronisation

An adaptation can be triggered manually by pressing the "Adaptation" button or with the PC-Tool. Both mechanical end stops are detected during the adaptation (entire setting range). Automatic synchronisation after actuating the hand crank is programmed. The synchronisation is in the home position (0%).

The actuator then moves into the position defined by the control signal.

A range of settings can be made using Belimo Assistant 2.

Flexible signalling

If a combination with the following electrical accessories is required, please contact your Belimo representative!

S2A-F Auxiliary switch 2 x SPDT

P200A-F Feedback potentiometer 200 Ω

P1000A-F Feedback potentiometer 1 kΩ

Accessories

Tools

Description	Type
Service tool for wired and wireless setup, on-site operation and troubleshooting.	Belimo Assistant 2
Belimo Assistant Link Bluetooth and USB to NFC and MP-Bus converter for configurable and communicative devices	LINK.10
Connecting cable 5 m, A: RJ11 6/4 LINK.10, B: 6-pin for connection to service socket	ZK1-GEN
Connecting cable 5 m, A: RJ11 6/4 LINK.10, B: free wire end for connection to MP/PP terminal	ZK2-GEN

Electrical accessories

Description	Type
Signal converter voltage/current 100 kΩ 4...20 mA, Supply AC/DC 24 V	Z-UIC
Positioner for wall mounting	SGA24
Positioner for built-in mounting	SGE24
Positioner for front-panel mounting	SGF24
Positioner for wall mounting	CRP24-B1
MP-Bus power supply for MP actuators	ZN230-24MP

Gateways

Description	Type
Gateway MP to BACnet MS/TP	UK24BAC
Gateway MP to Modbus RTU	UK24MOD

Mechanical accessories

Description	Type
Cable gland for cable diameter ø4...10 mm	Z-KB-PG11

Options ex works only

Description	Type
Heater, with adjustable thermostat	HT24-FG
Heater, with mechanical humidistat	HH24-FG

Electrical installation

Supply from isolating transformer.

Parallel connection of other actuators possible. Observe the performance data.

Electrical installation

Wire colours:
1 = black
2 = red
3 = white
5 = orange

MP-Bus

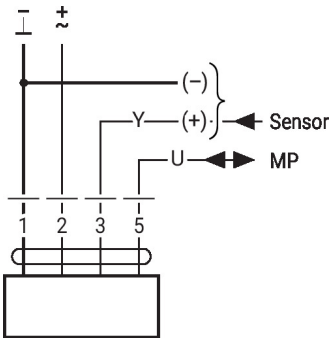

AC/DC 24 V, modulating

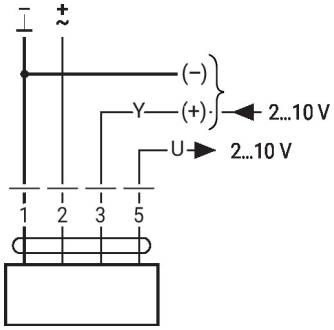

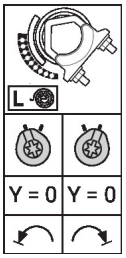

Further electrical installations

Functions with basic values (conventional mode)

Override control with AC 24 V with relay contacts

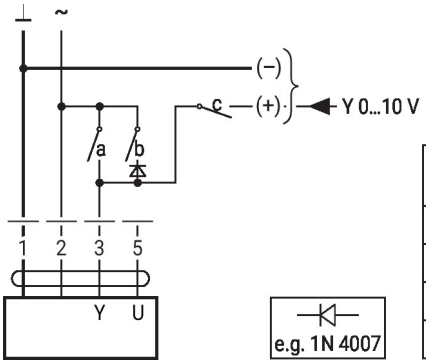

1	2	a	b	c	
⊸	⊸	⊸	⊸	⊸	0 %
⊸	⊸	⊸	⊸	⊸	ZS 50%
⊸	⊸	⊸	⊸	⊸	100%
⊸	⊸	⊸	⊸	⊸	Y

Override control with AC 24 V with rotary switch

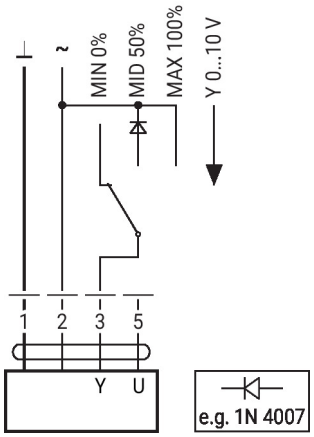

Control remotely 0...100% with positioner SG..

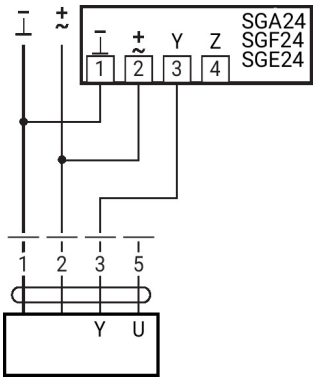

Minimum limit with positioner SG..

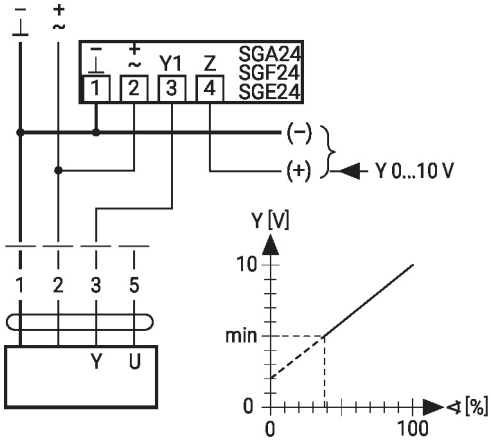

Further electrical installations

Functions with basic values (conventional mode)

Primary/secondary operation (position-dependent)

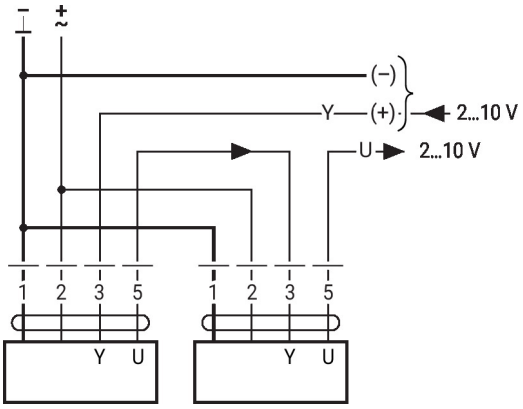

Control with 4...20 mA via external resistor

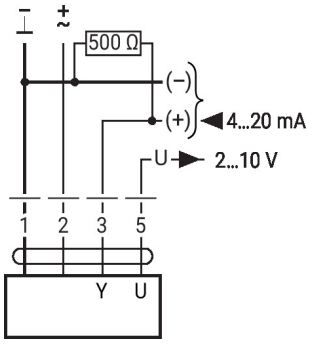

Caution:
The operating range must be set to DC 2...10 V.
The 500 Ohm resistor converts the 4...20 mA current signal to a voltage signal DC 2...10 V.

Functional check

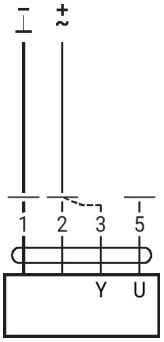

Procedure
1. Connect 24 V to connections 1 and 2
2. Disconnect connection 3:
– With direction of rotation 0: Actuator rotates to the left
– With direction of rotation 1: Actuator rotates to the right
3. Short-circuit connections 2 and 3:
– Actuator runs in opposite direction

MP-Bus

MP-Bus Network topology

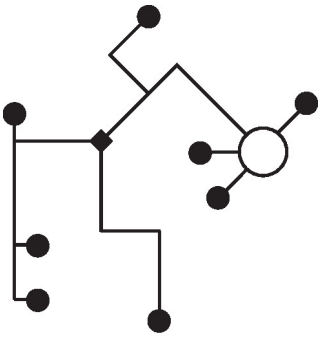

There are no restrictions for the network topology (star, ring, tree or mixed forms are permitted).
Supply and communication in one and the same 3-wire cable
• no shielding or twisting necessary
• no terminating resistors required

Connection on the MP-Bus

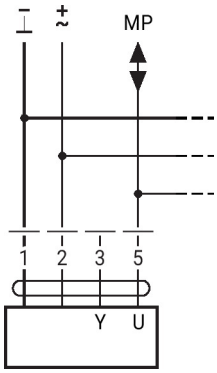

Max. 8 MP-Bus nodes

Further electrical installations

MP-Bus

Connection of active sensors

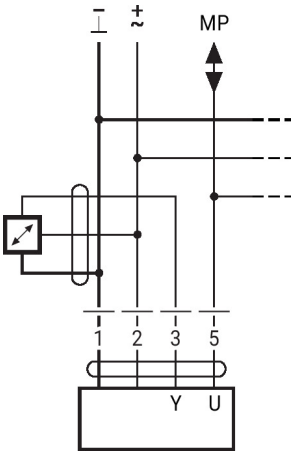

- Supply AC/DC 24 V
- Output signal 0...10 V (max. 0...32 V)
- Resolution 30 mV

Connection of external switching contact

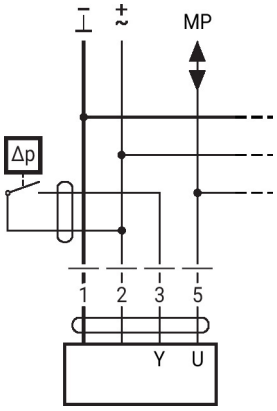

- Switching current 16 mA @ 24 V
- Start point of the operating range must be configured on the MP actuator as ≥0.5 V

Connection of passive sensors

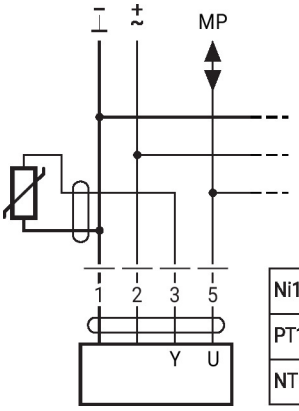

Ni1000	−28...+98°C	850...1600 Ω [2]
PT1000	−35...+155°C	850...1600 Ω [2]
NTC	−10...+160°C [1]	200 Ω...60 kΩ [2]

1) Depending on the type
2) Resolution 1 Ohm
Compensation of the measured value is recommended

Functions with specific parameters (configuration necessary)

Override control and limiting with AC 24 V with relay contacts

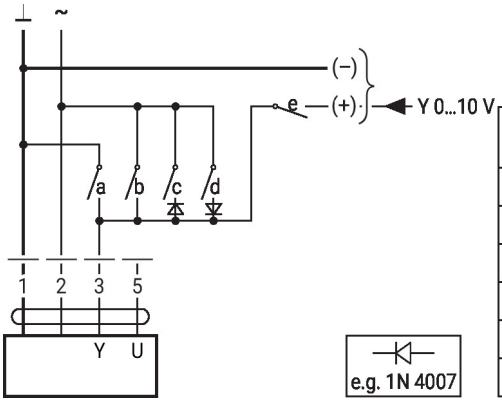

1	2	a	b	c	d	e	
							Close
							MIN
							ZS
							MAX
							Open
							Y

Control open/close

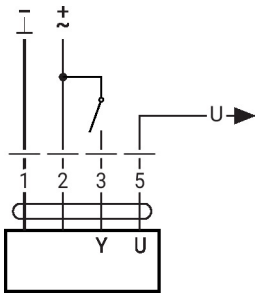

Further electrical installations

Functions with specific parameters (configuration necessary)

Control 3-point with AC 24 V

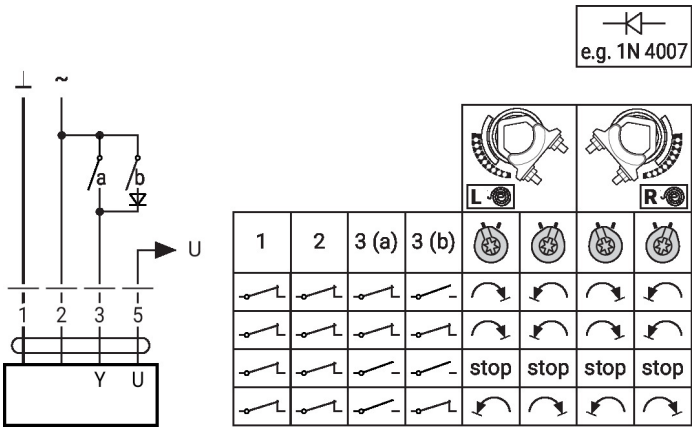

Override control and limiting with AC 24 V with rotary switch

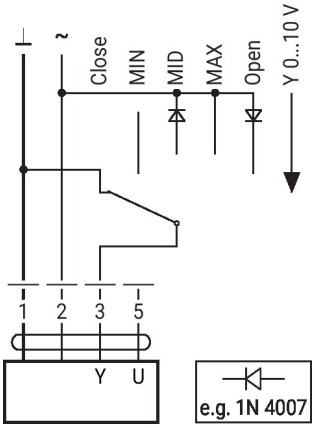

Caution:
The "Close" function is only guaranteed if the start point of the operating range is defined as min. 0.5 V.

Operating controls and indicators

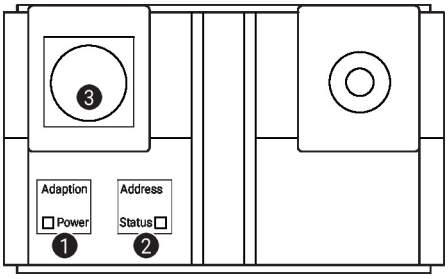

1 Membrane key and LED display green

Off:	No power supply or malfunction
On:	In operation
Press button:	Triggers angle-of-rotation adaptation, followed by standard mode

2 Membrane key and LED display yellow

Off:	Standard mode
On:	Adaptation or synchronisation process active
Flickering:	MP-Bus communication active
Flashing:	Request for addressing from MP client
Press button:	Confirmation of the addressing

3 Service plug
For connecting configuration and service tools

Operating elements
The manual override, locking switch and direction-of-rotation switch elements are available on both sides

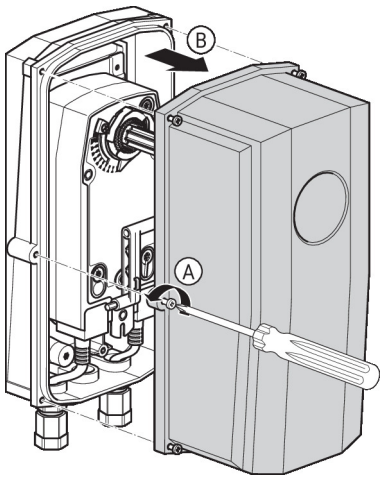

Service

Using Belimo Assistant 2, device parameters can be modified. Belimo Assistant 2 can operate on a smartphone, tablet or PC. The available connection options vary depending on the hardware on which Belimo Assistant 2 is installed.

For more information about Belimo Assistant 2, refer to the Quick Guide – Belimo Assistant 2.

Wired connection

Belimo devices can be accessed by connecting Belimo Assistant Link to the USB port on a PC or laptop and to the Service Socket or MP-Bus wire on the device.

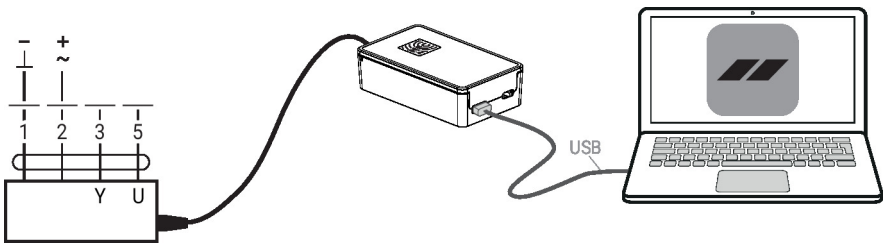

Dimensions

Shaft length

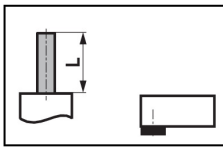	-
	16...105 (ø12...19) 16...45 (ø19...26.7)

Clamping range

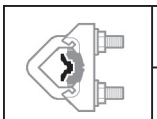		
	12...22	12...18
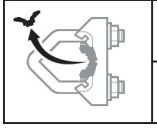		
	22...26.7	12...18

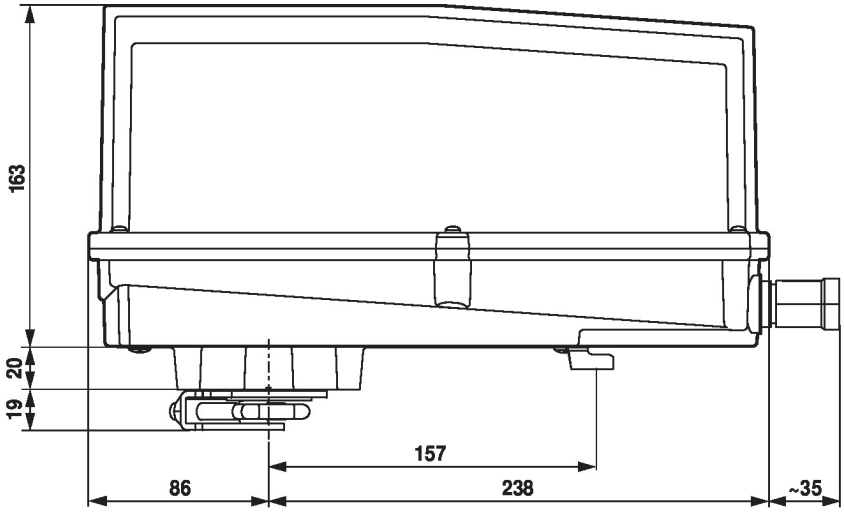

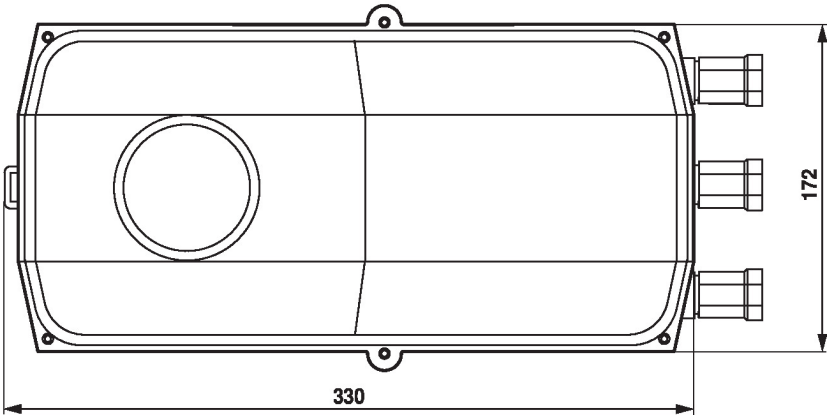

Further documentation

- Overview MP Cooperation Partners
- Tool connections
- Introduction to MP-Bus Technology
- Quick Guide – Belimo Assistant 2

Application notes

- For digital control of actuators in VAV applications patent EP 3163399 must be considered.